Modul-System

Instructions d’assemblage

Navigation dans le document

Vous pouvez naviguer dans le document en utilisant la barre d'outils signets. Si vous utilisez Adobe Reader vous trouverez le menu dans la barre d'outils, à gauche.

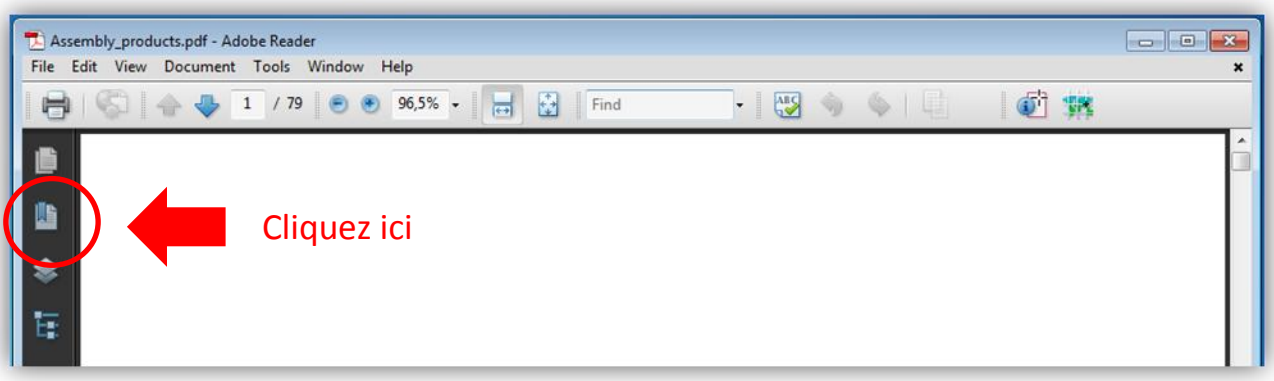

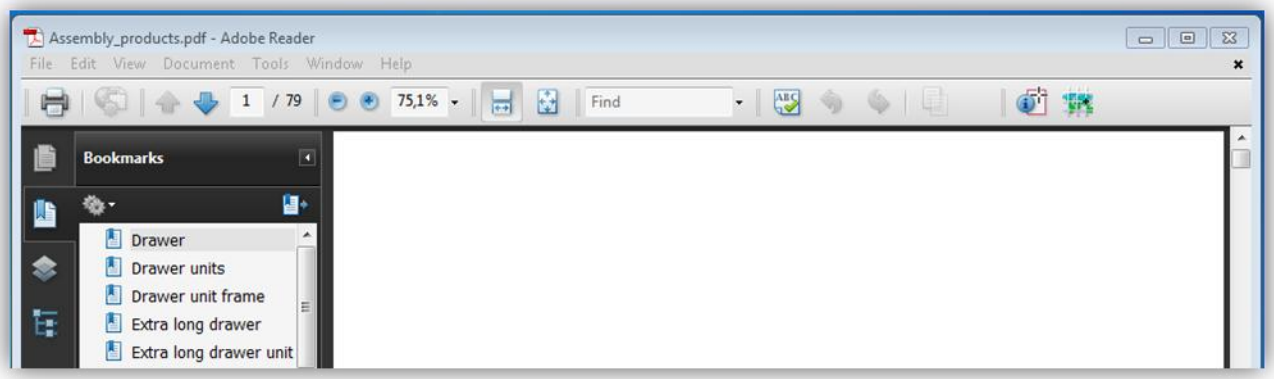

Si vous n'avez pas Adobe Reader vous pouvez le télécharger en

cliquant ici.

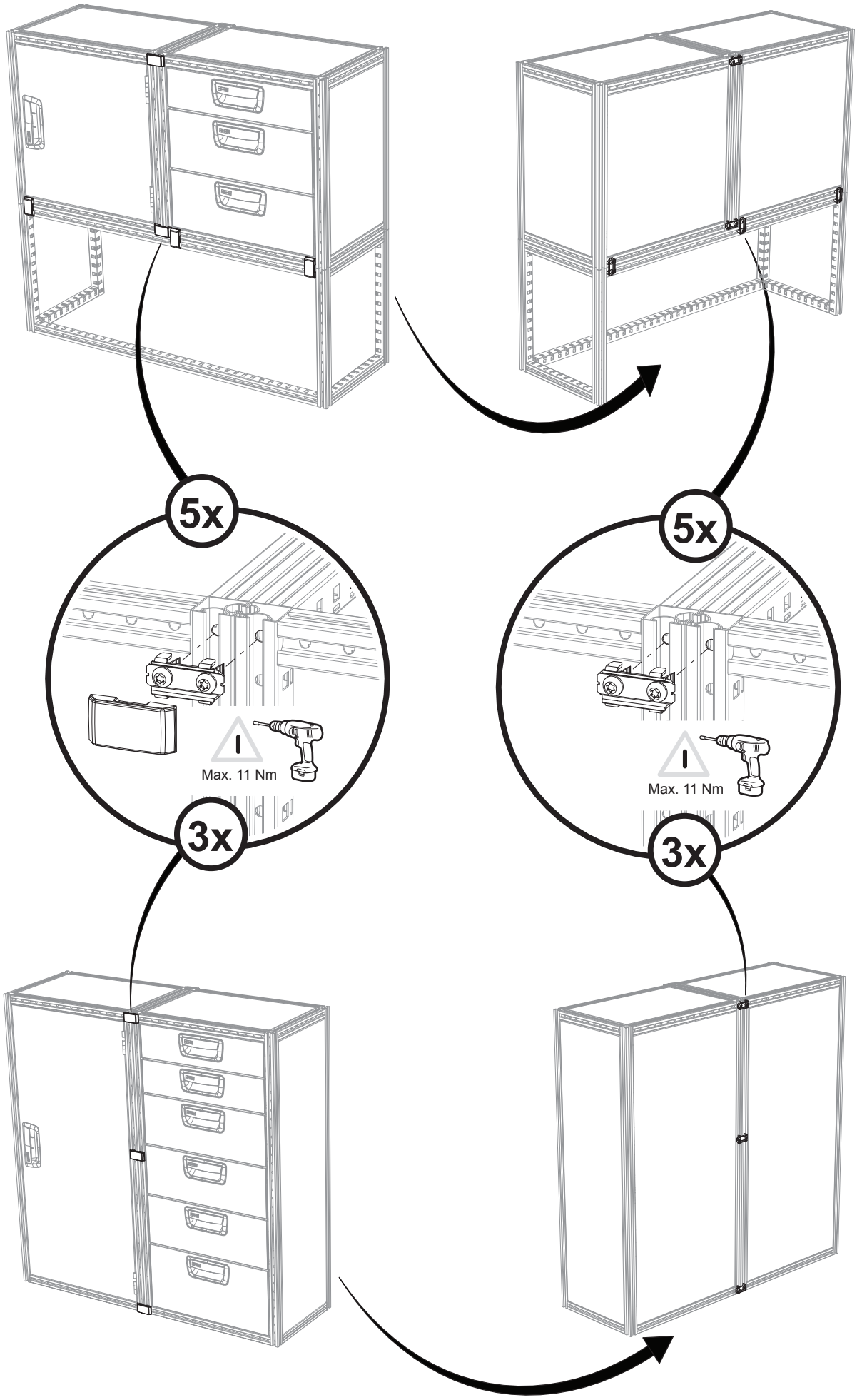
5x
Max. 11 Nm
5x
Max. 11 Nm
3x
3x

MODUL-SYSTEM 3123_05

1

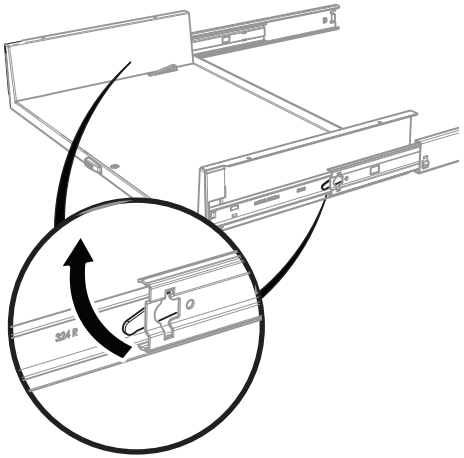

2

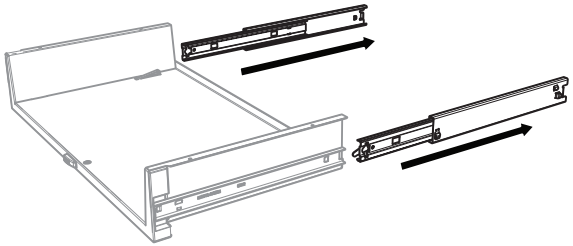

3

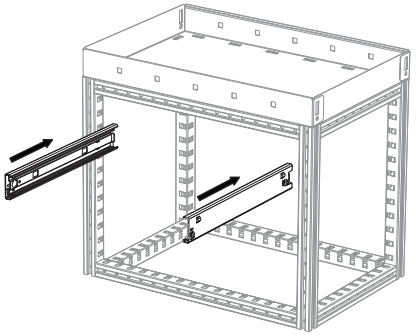

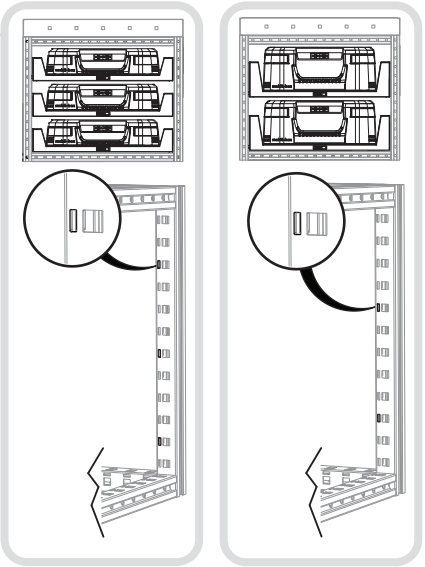

4

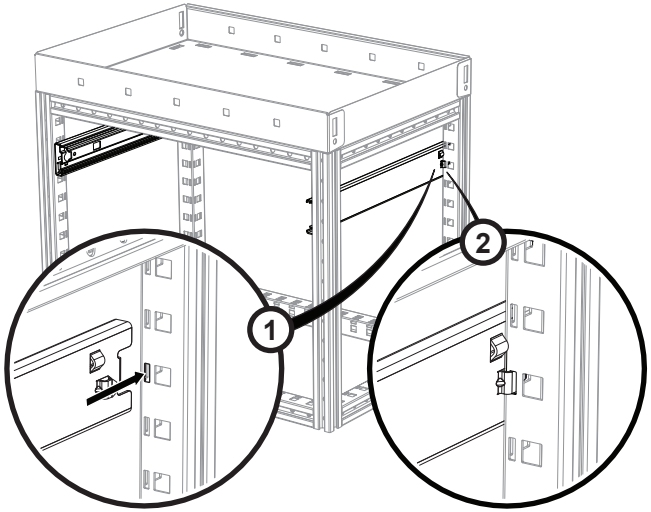

5

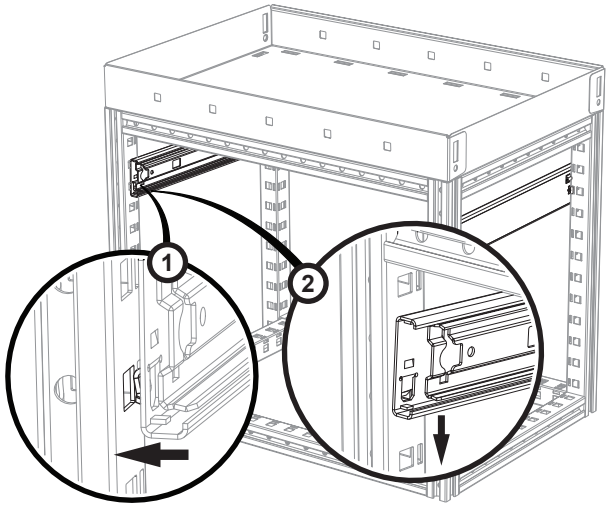

6

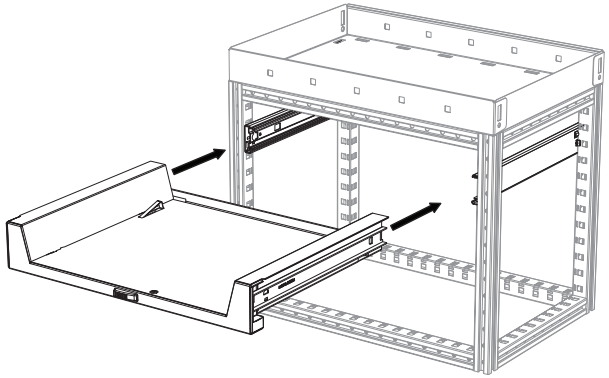

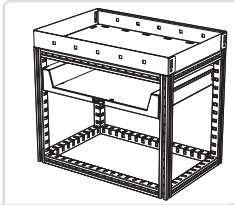

MODUL-SYSTEM 3024_01

1

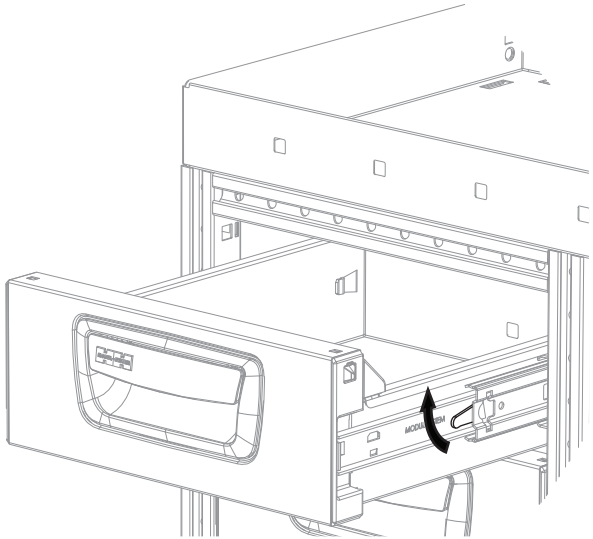

2

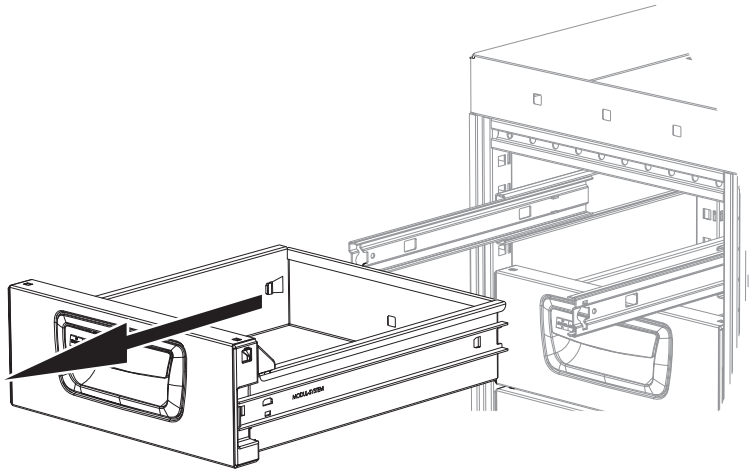

3

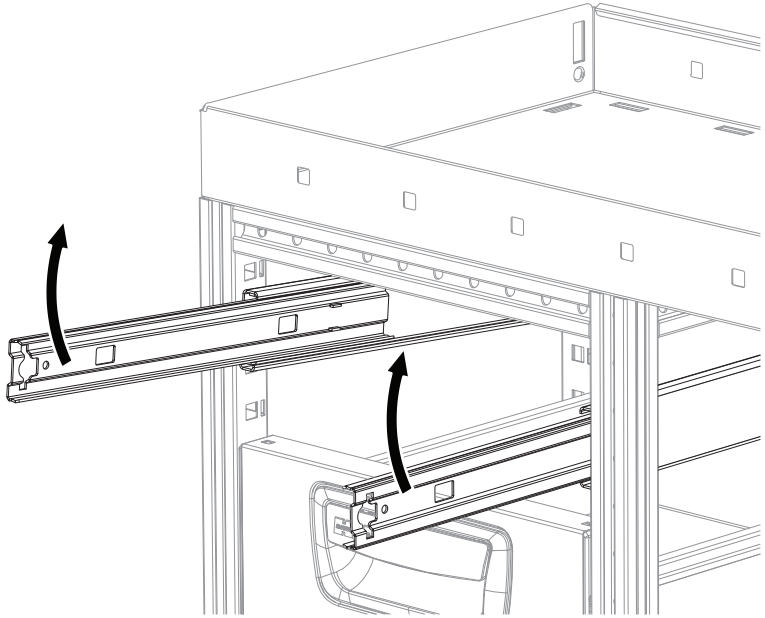

4

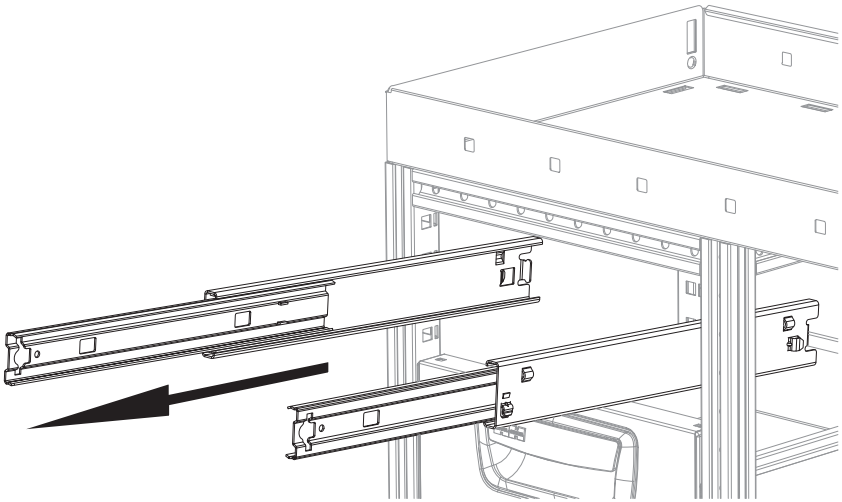

MODUL-SYSTEM 3036_05

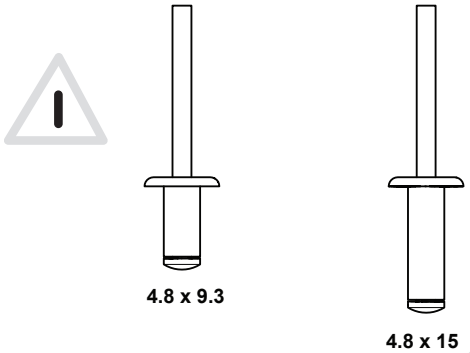

1

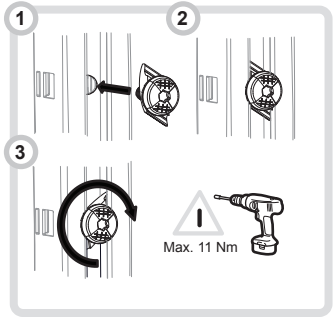

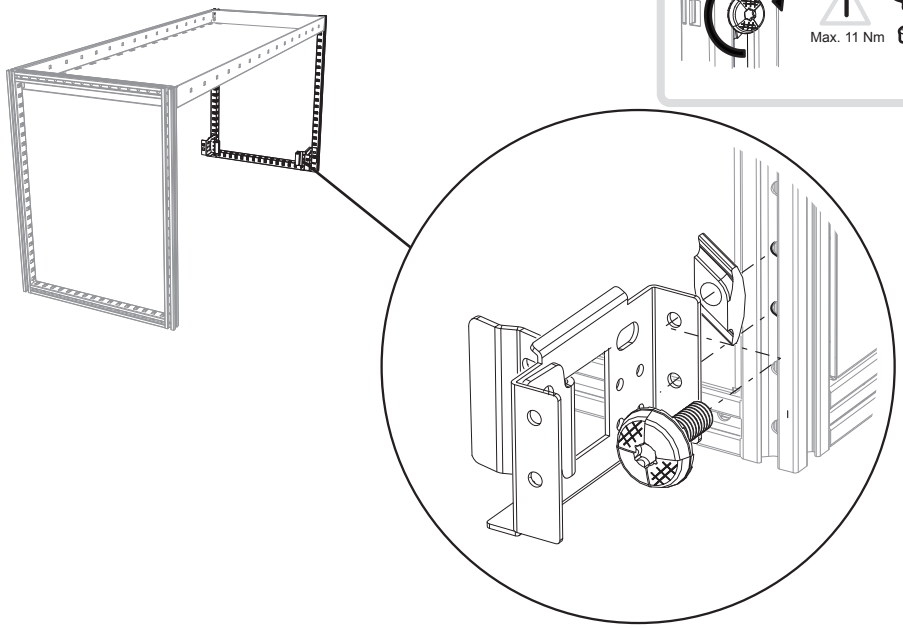

2

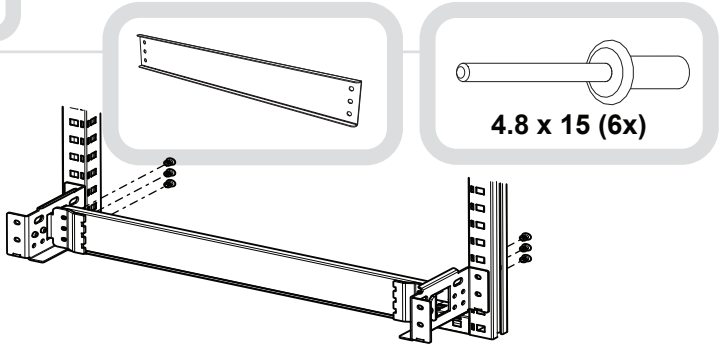

3

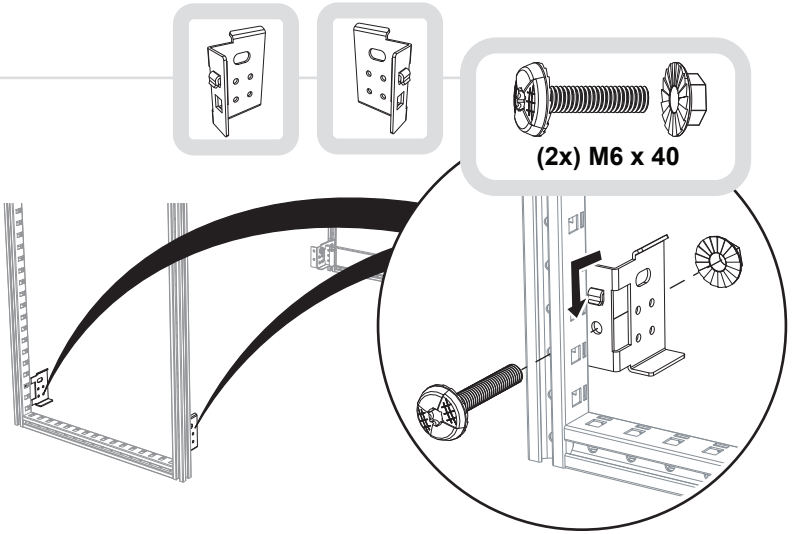

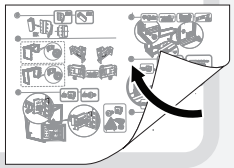

MODUL-SYSTEM 3036_05

4

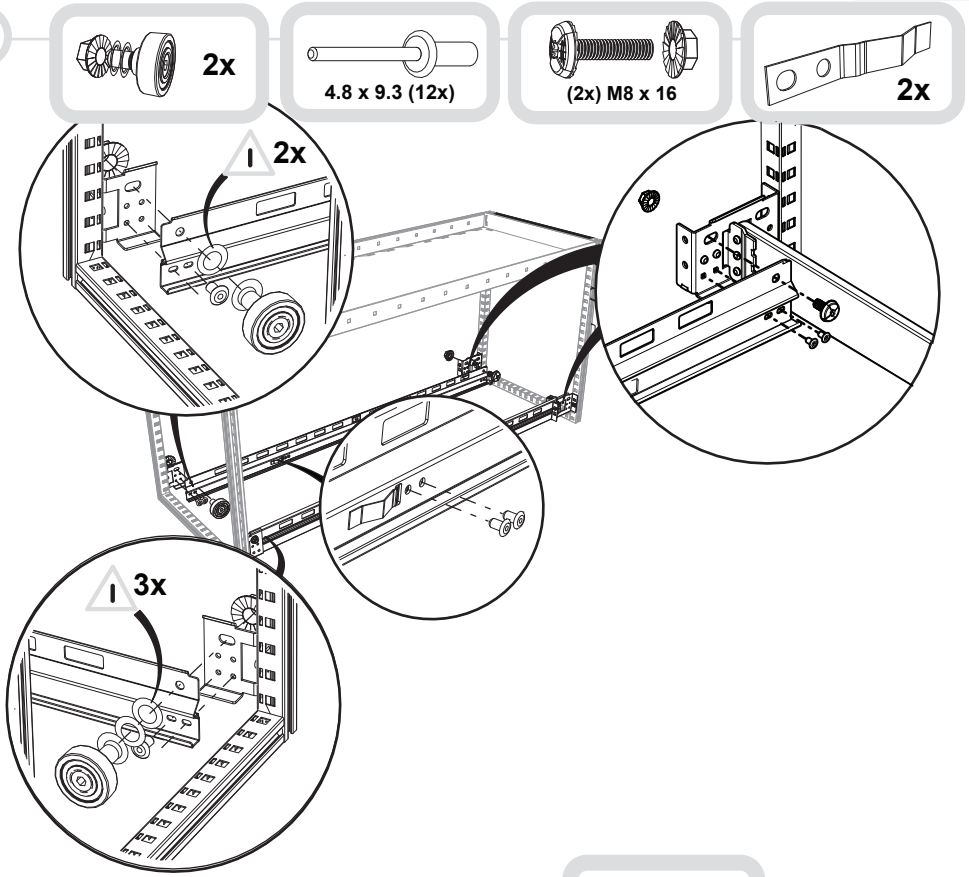

5

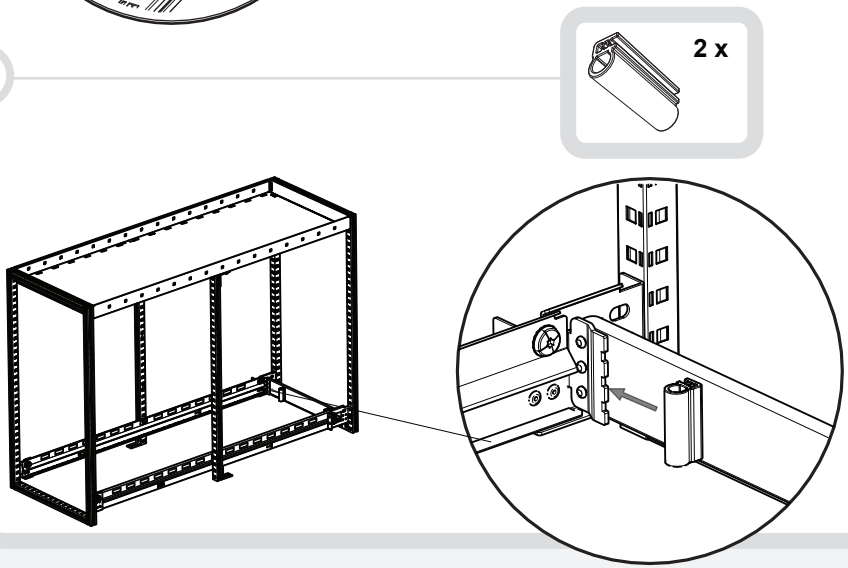

6

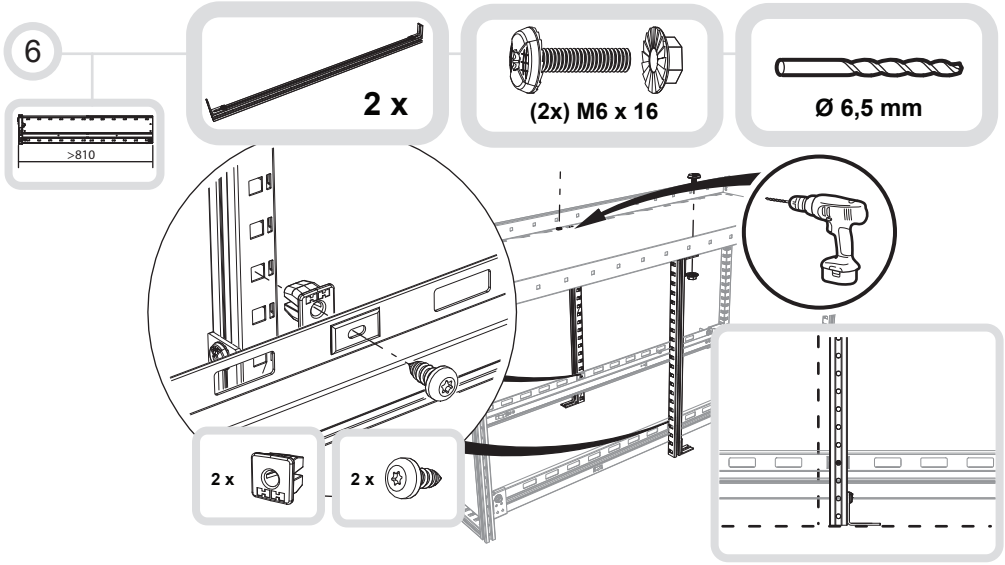

7

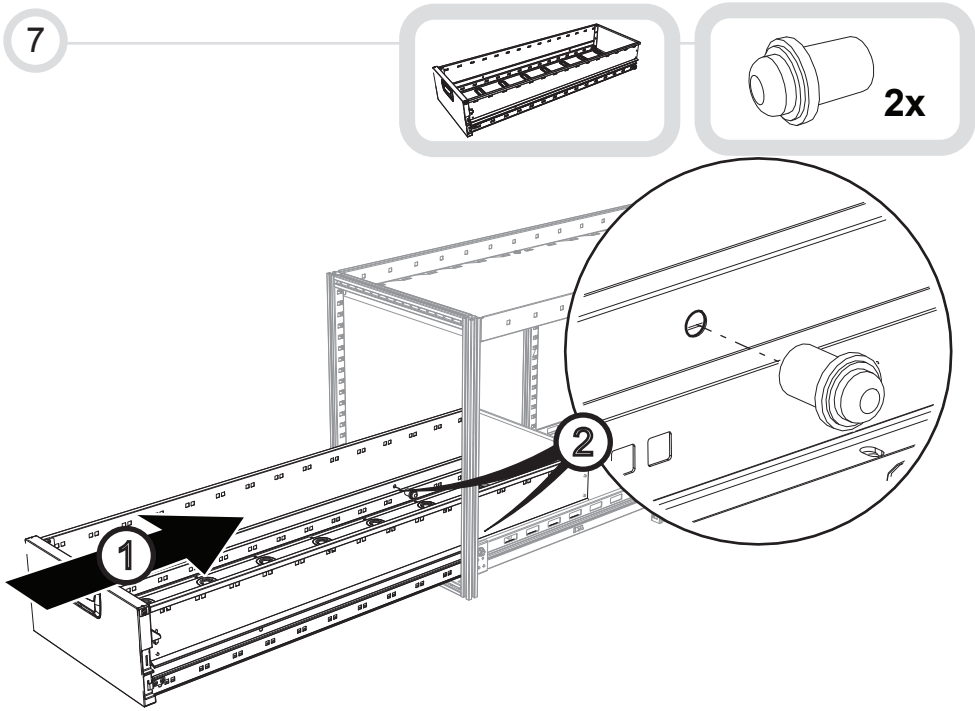

1

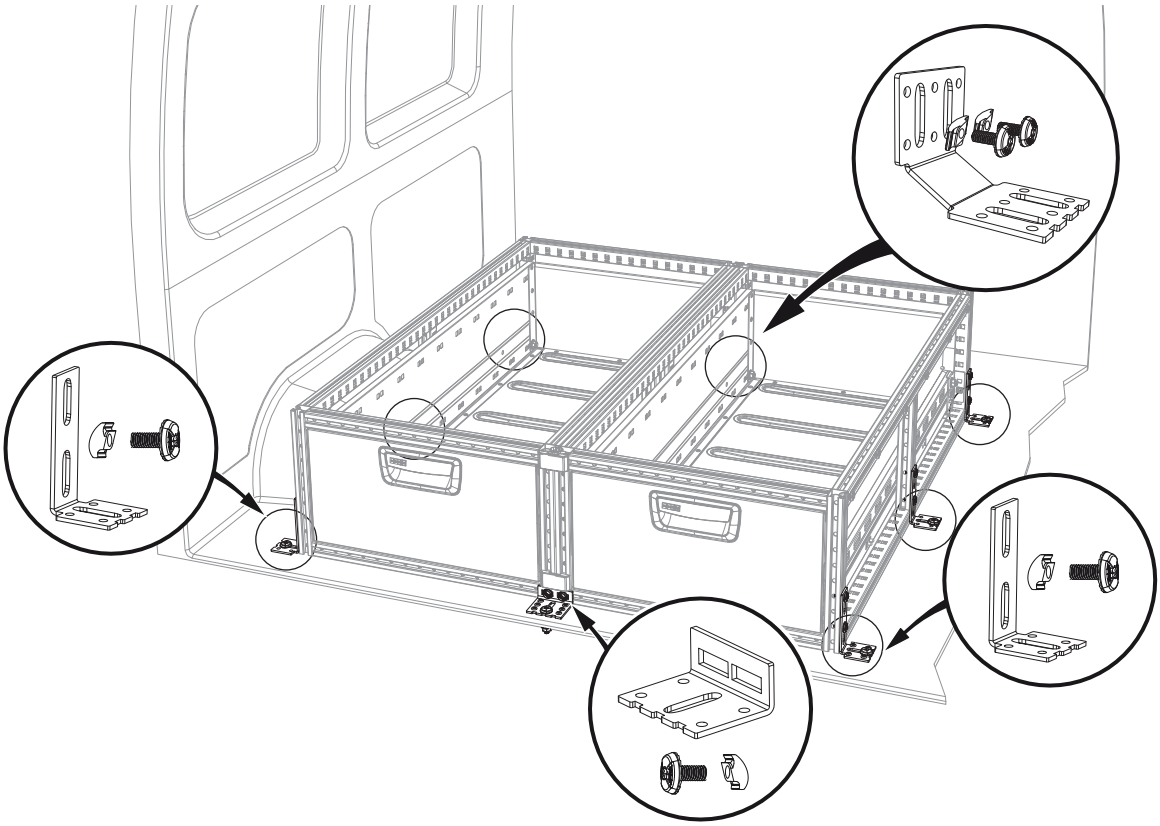

2

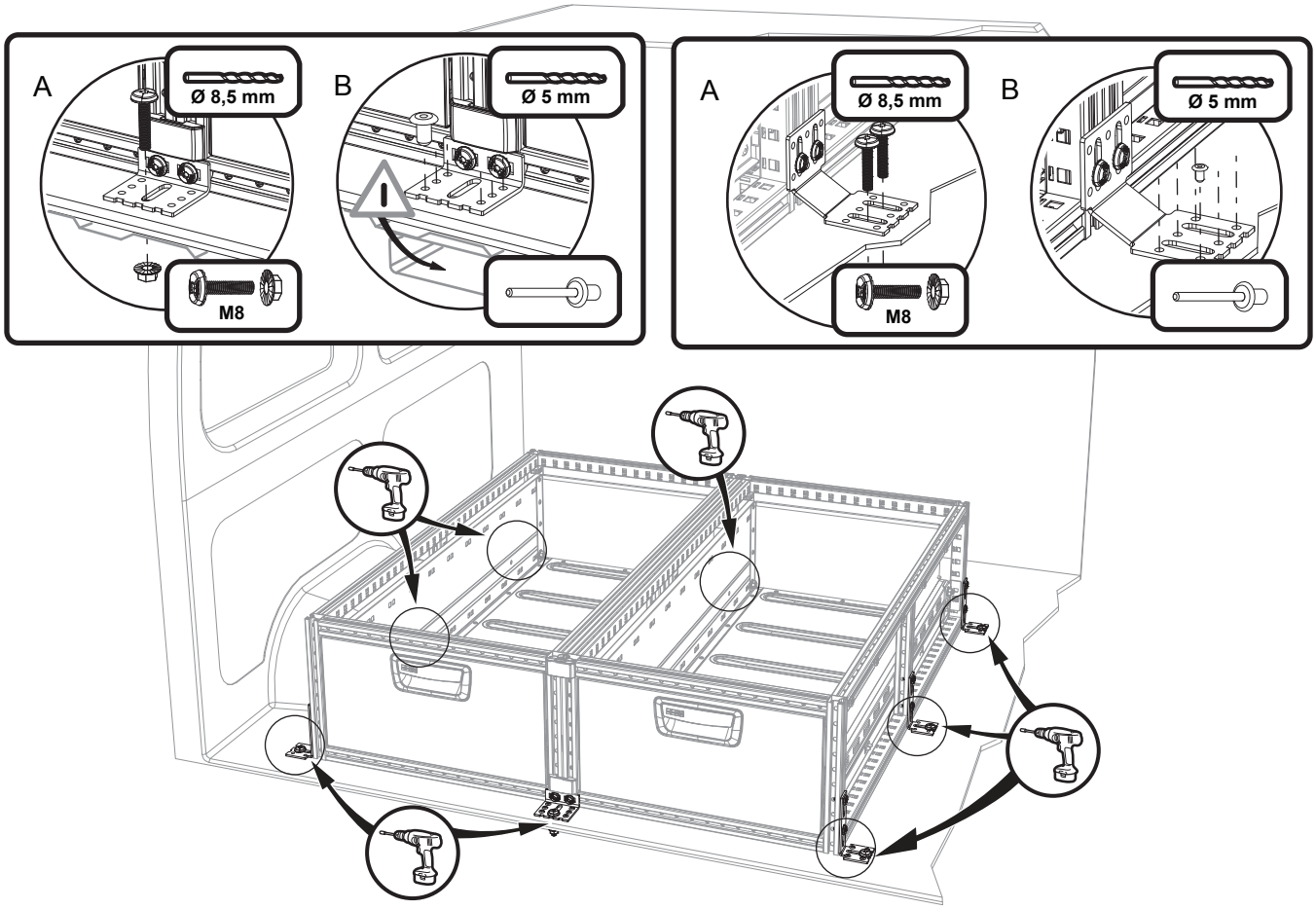

3

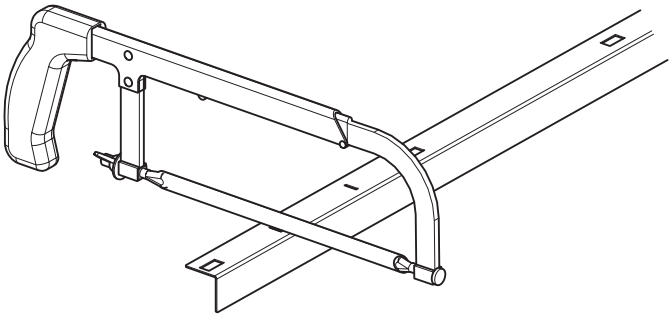

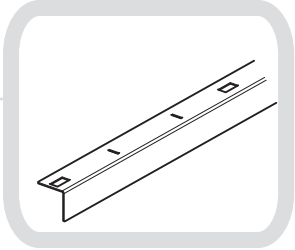

4

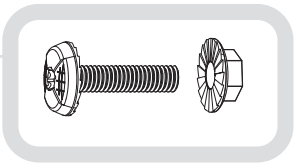

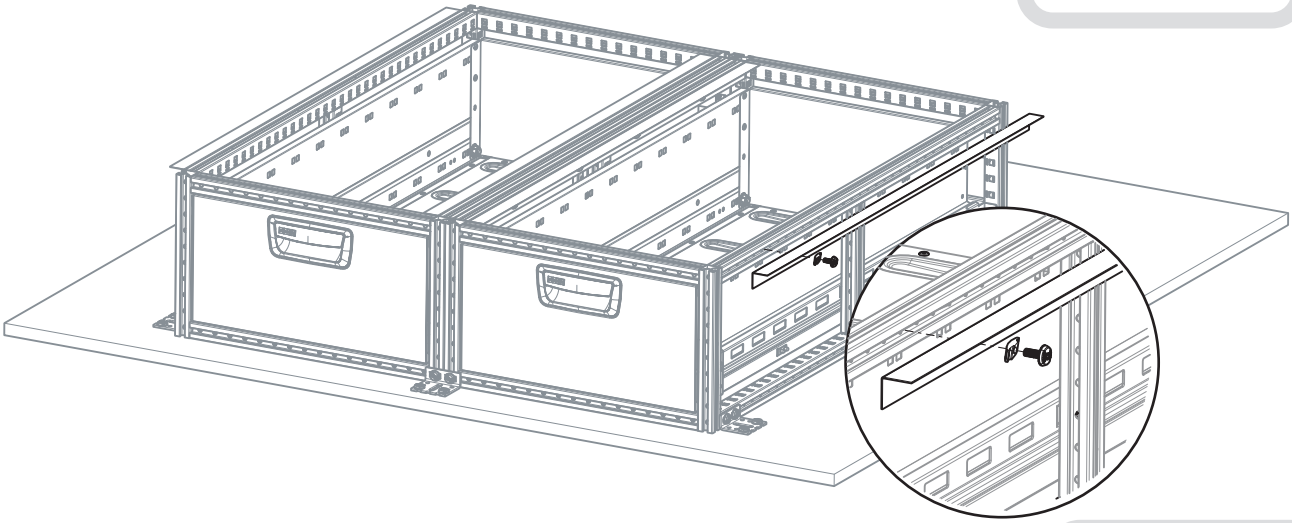

5

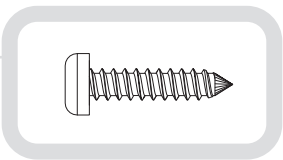

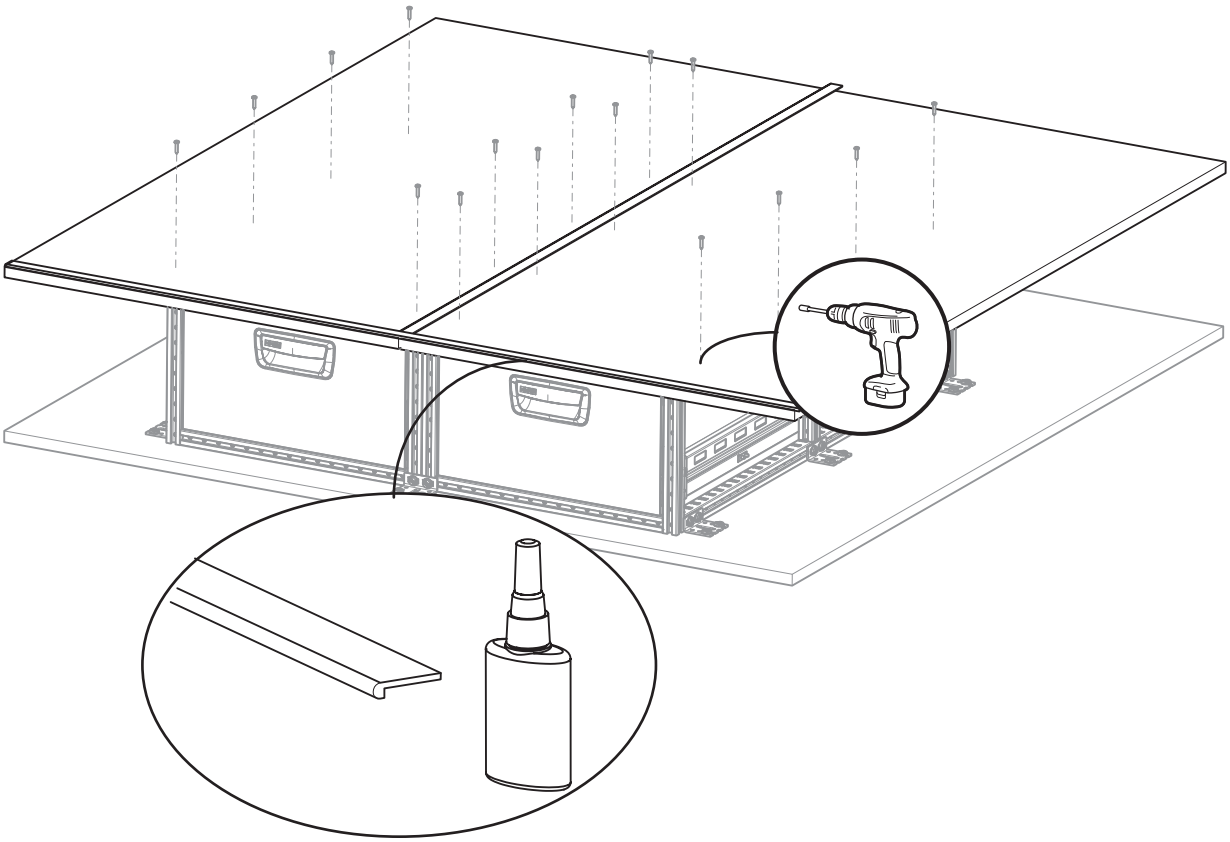

1

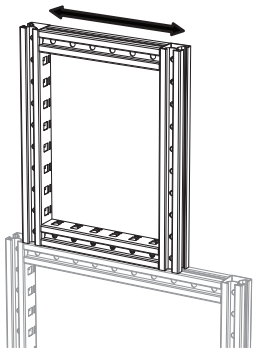

2

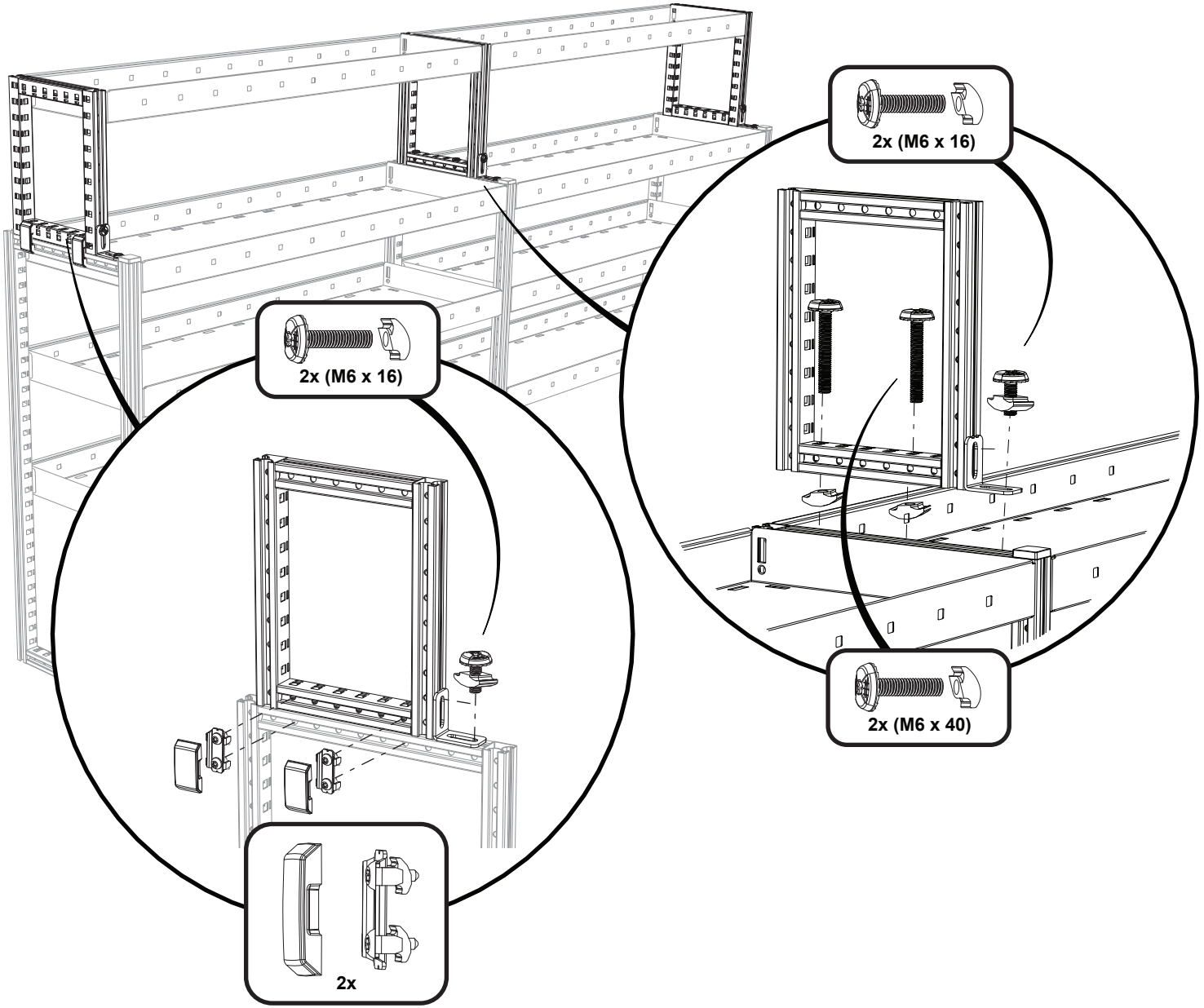

MODUL-SYSTEM 3042_04

1

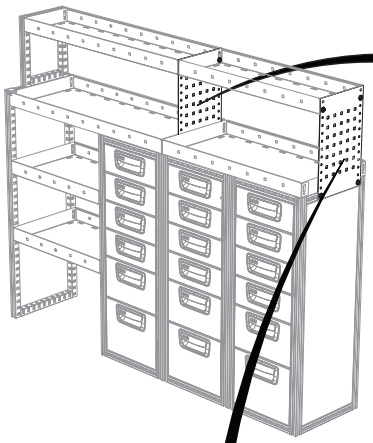

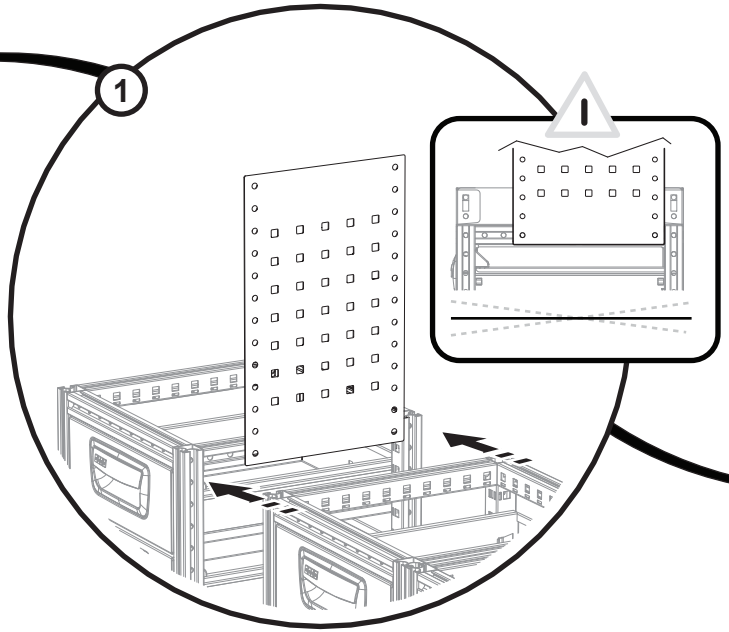

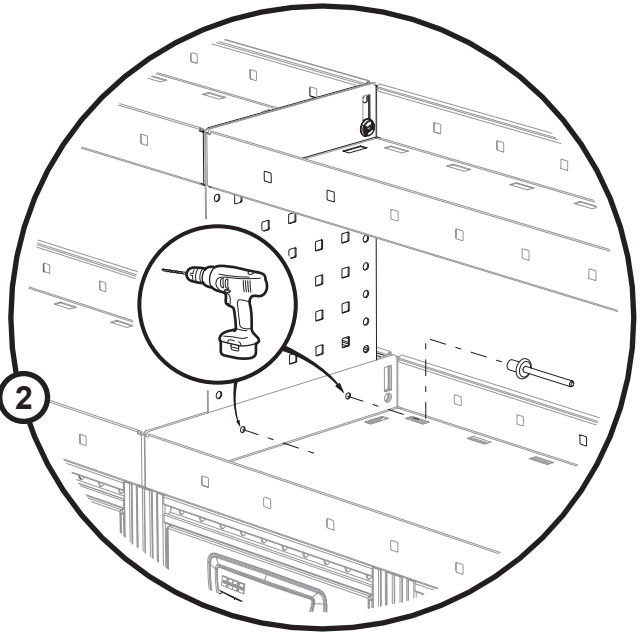

Ø 5 mm

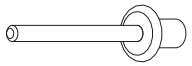

2x (4.8 x 8)

2

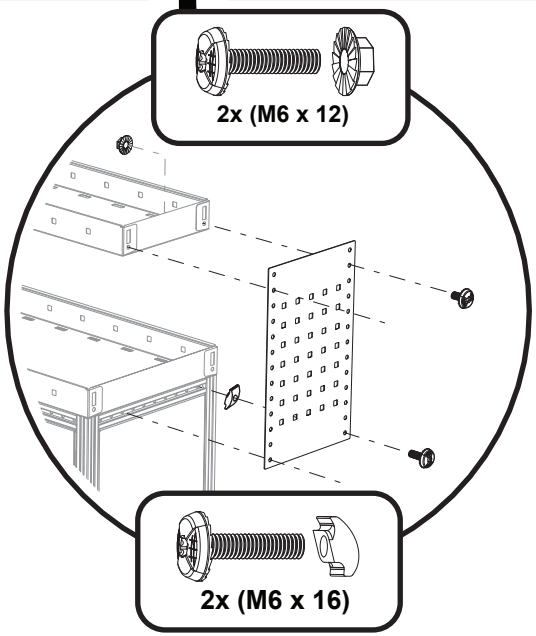

2x (M6 x 12)

2x (M6 x 16)

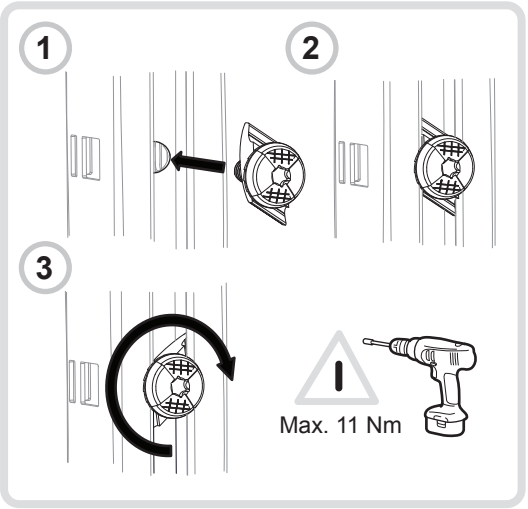

MODUL-SYSTEM 3041_03

1x

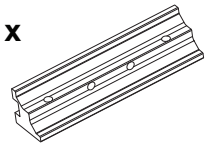

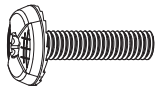

2x (M6 x 25)

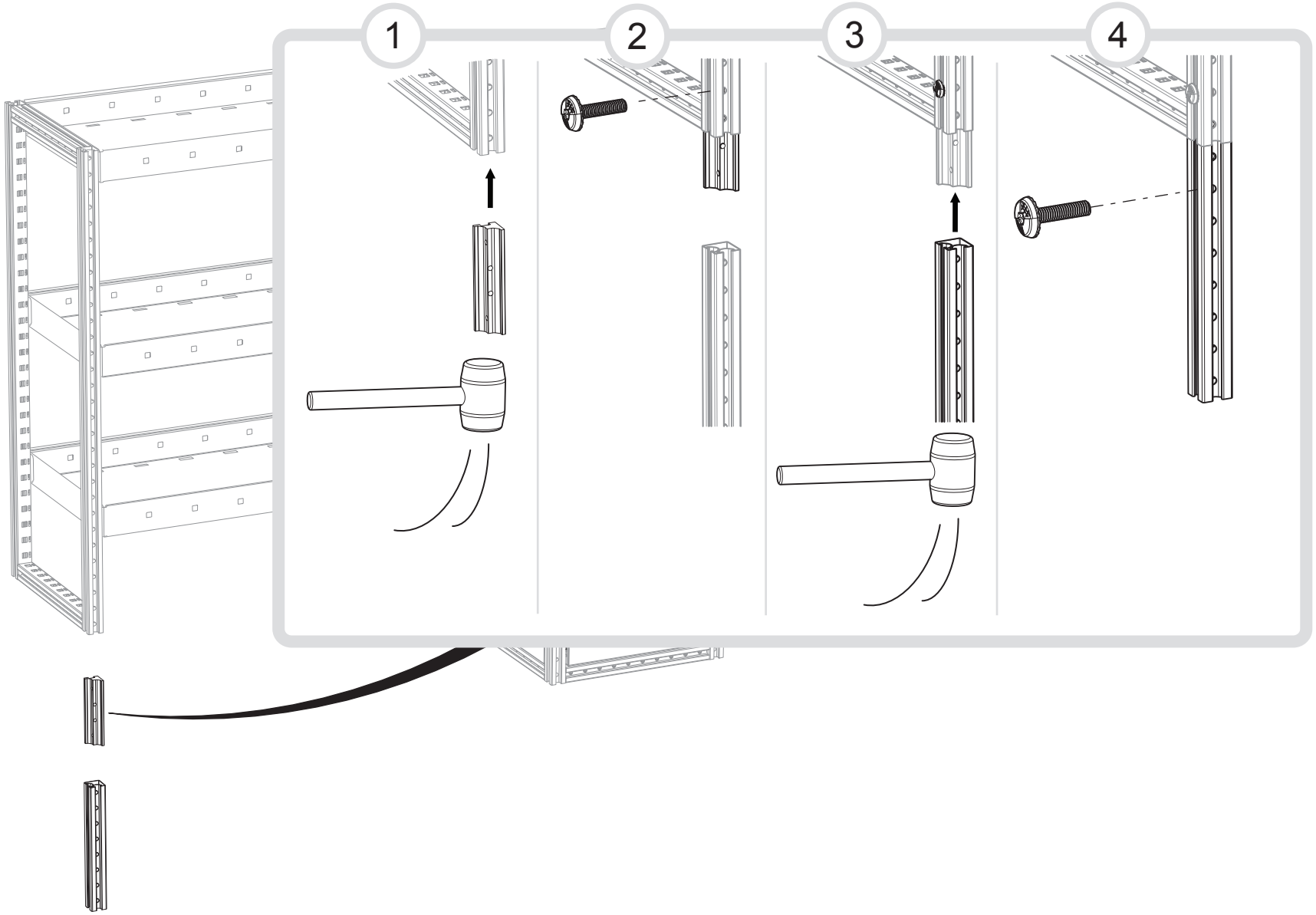

1

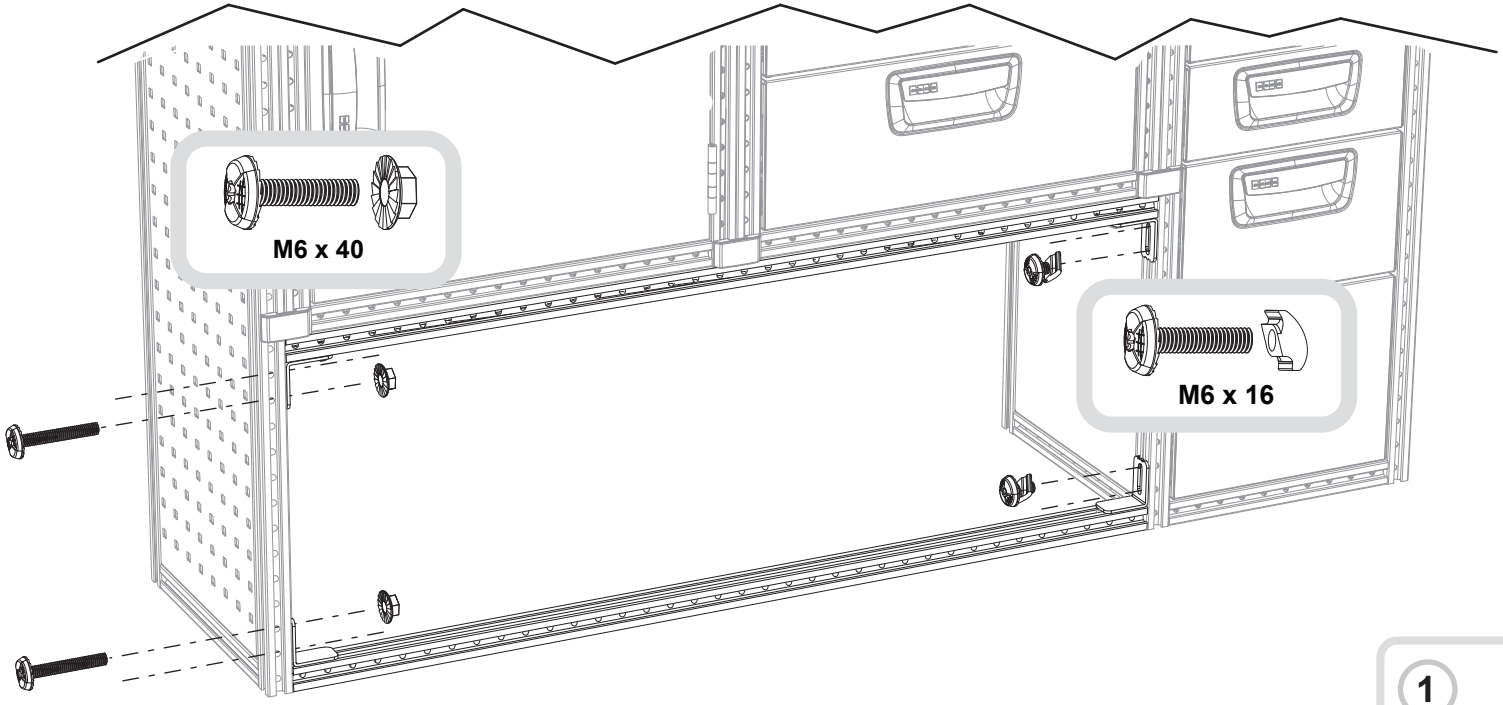

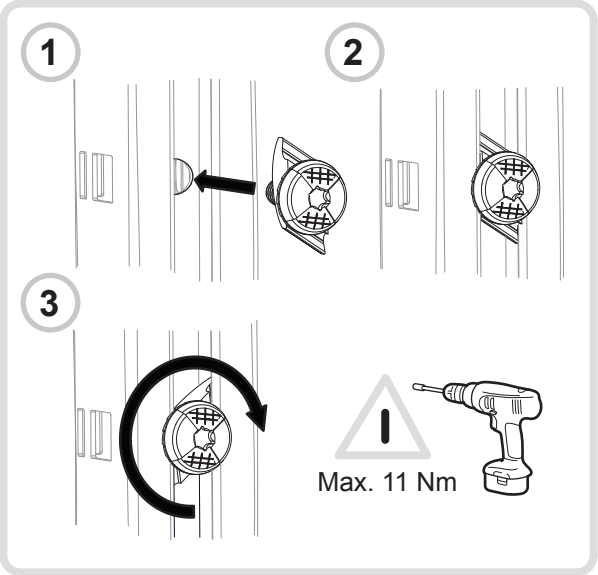

MODUL-SYSTEM 3012_03

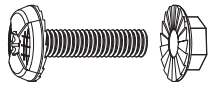

2x (M6 x 12)

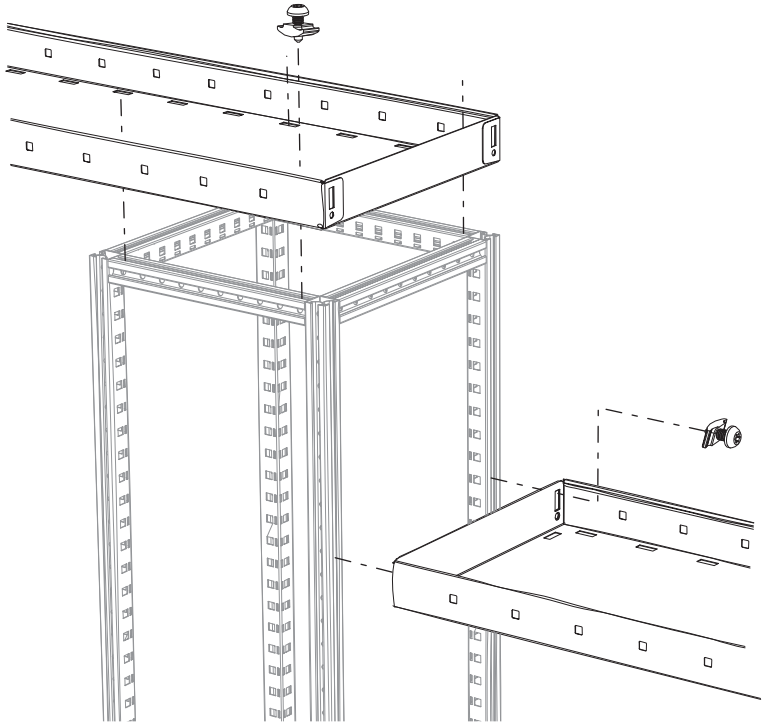

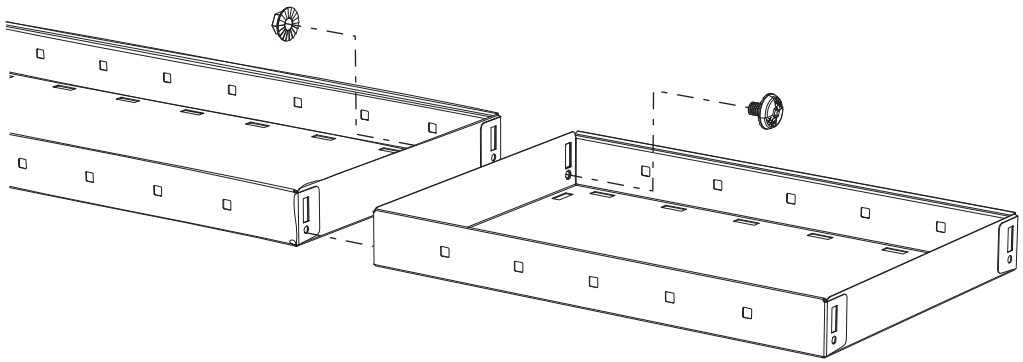

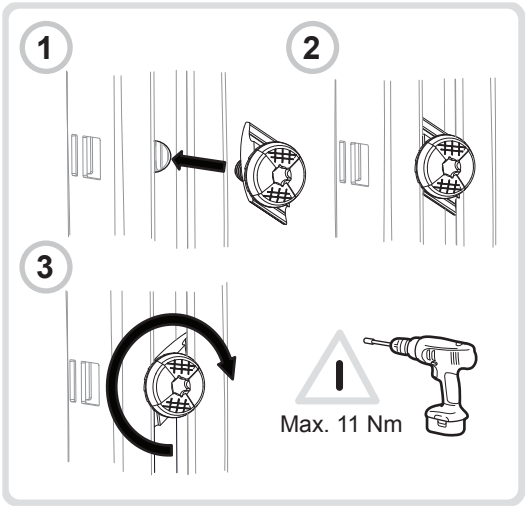

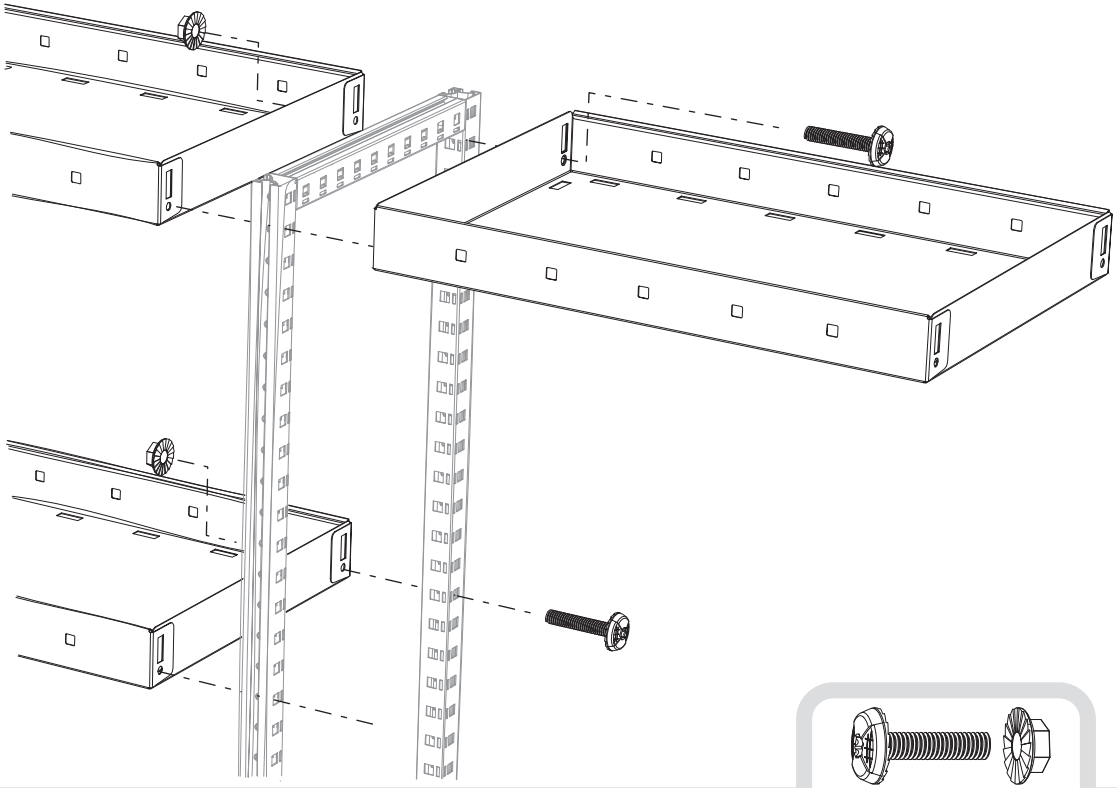

6x (M6 x 16)

4x (M6 x 40)

MODUL-SYSTEM 3013_02

1

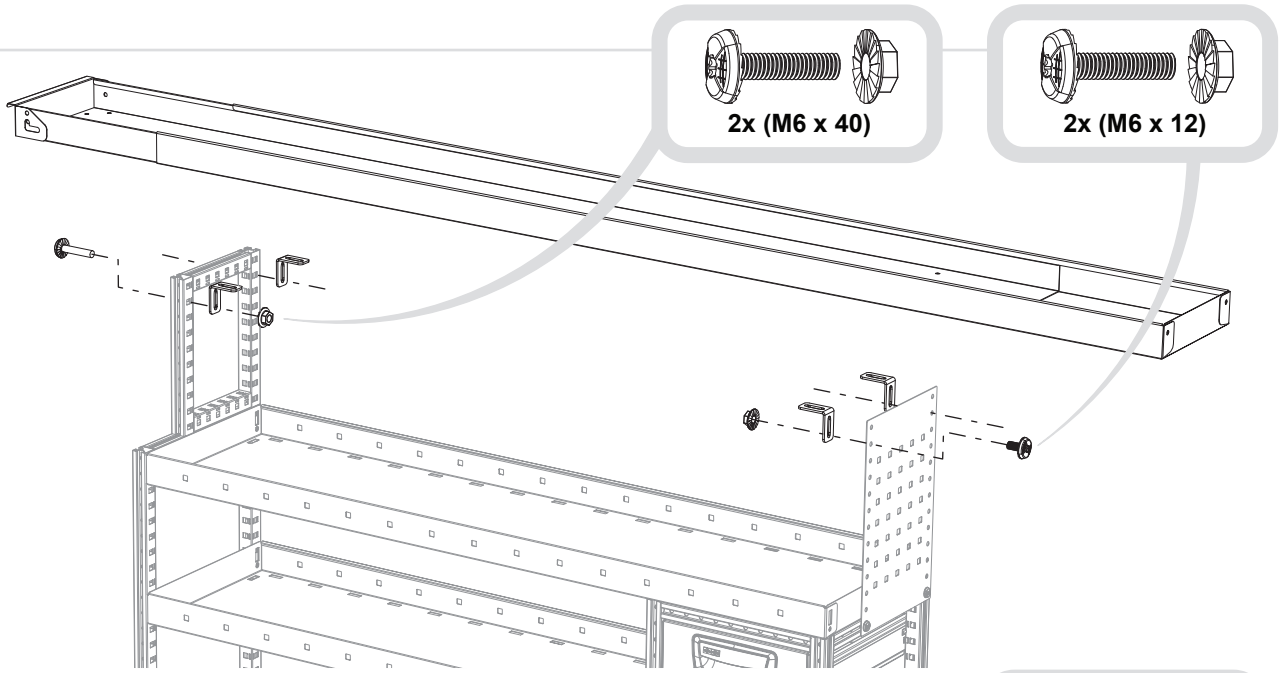

2

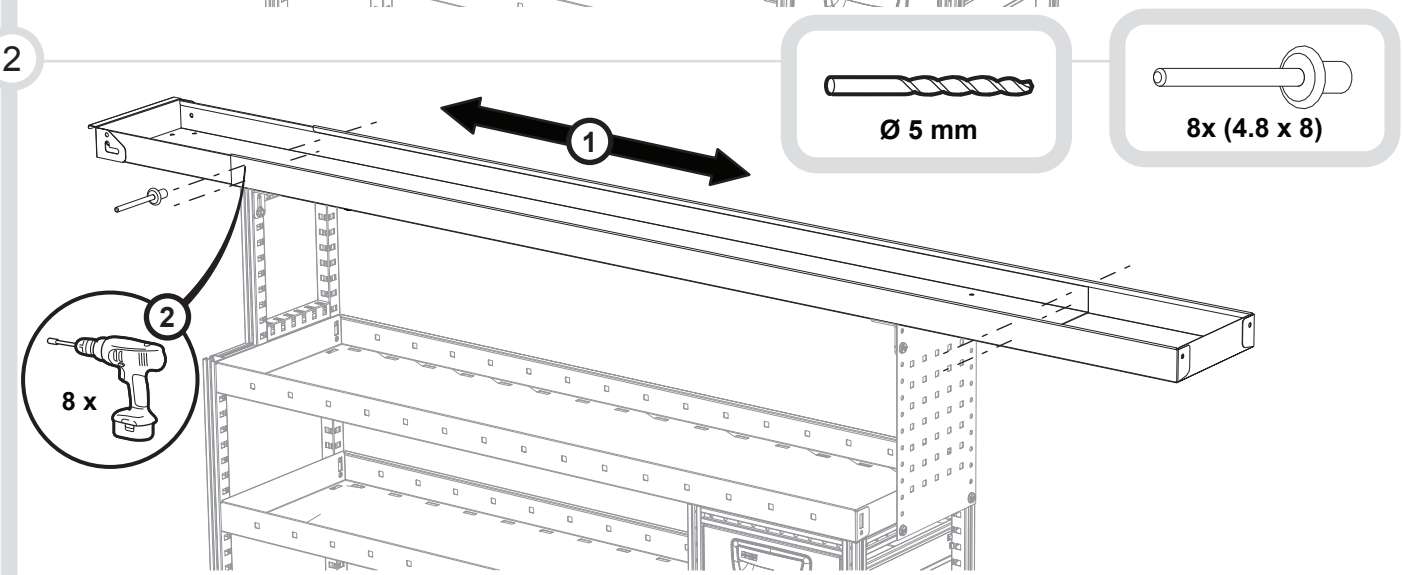

3

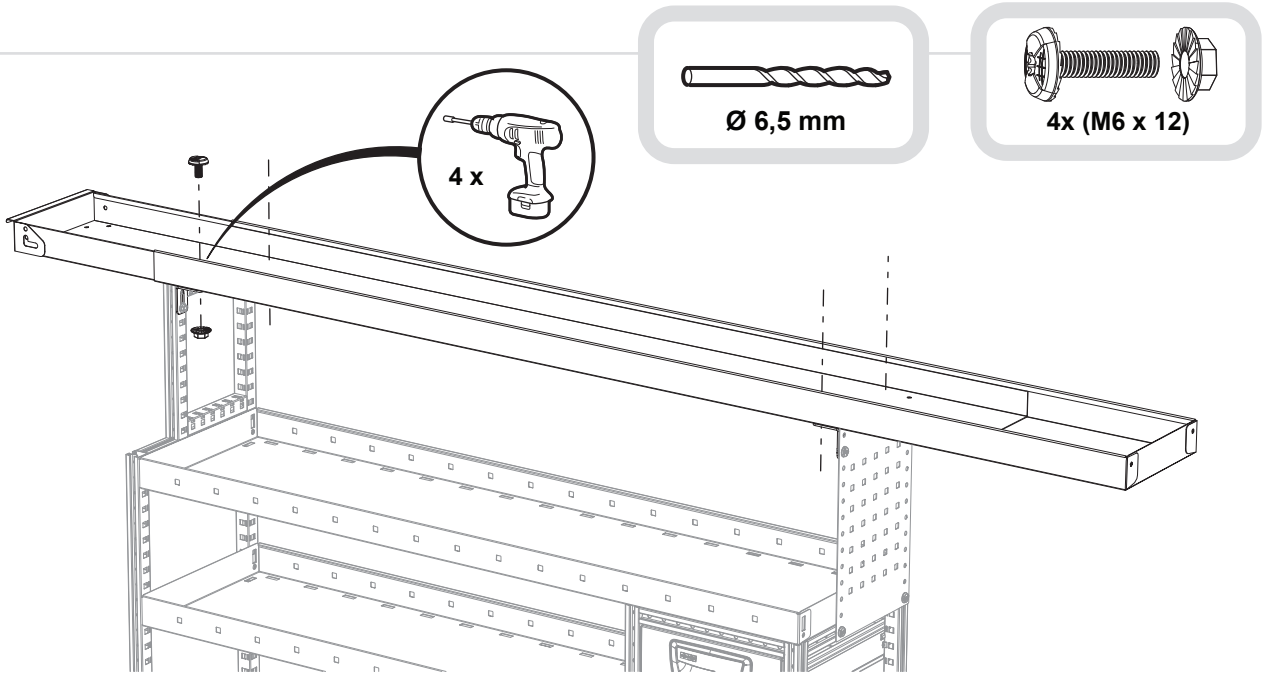

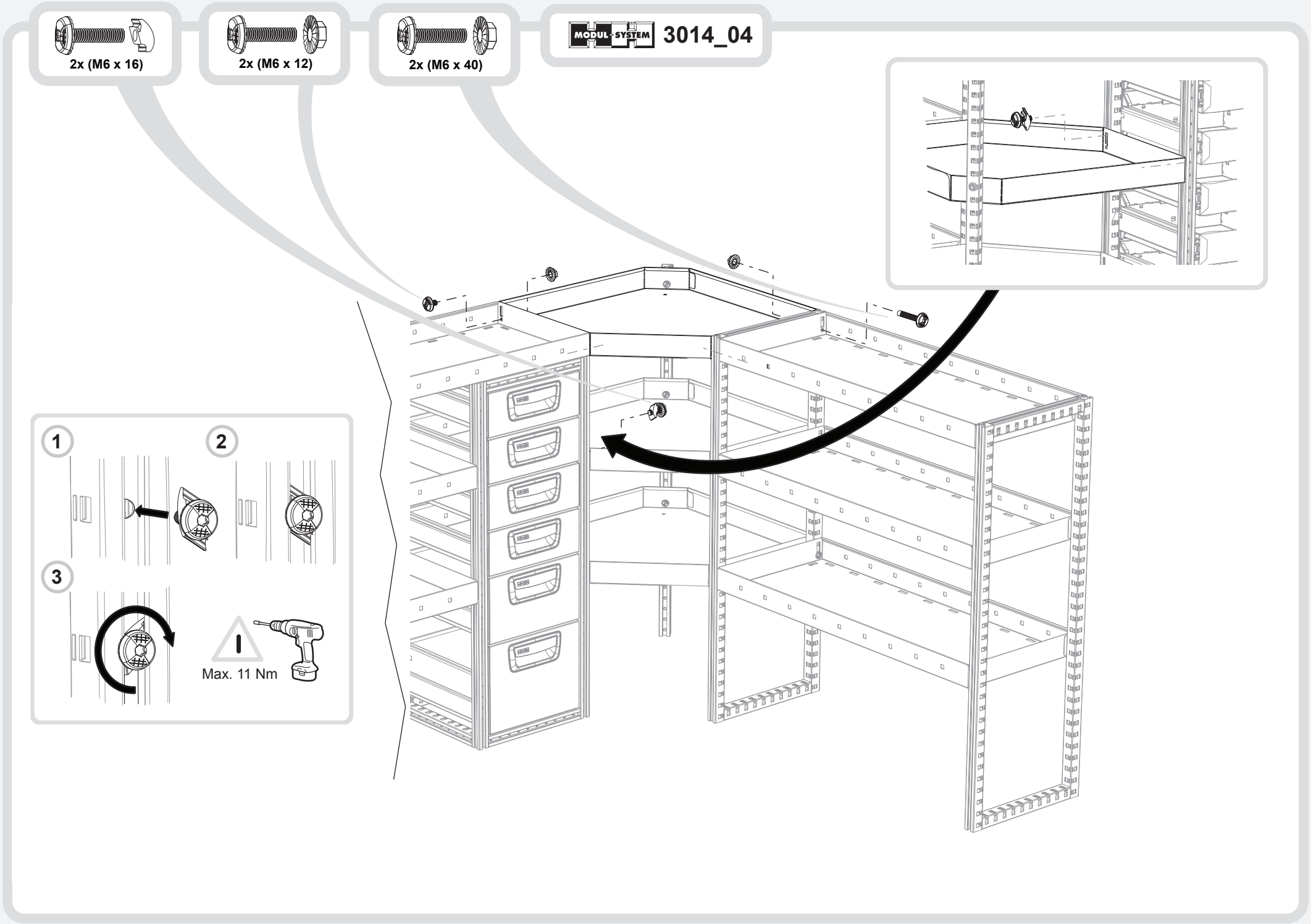
2x (M6 x 16)
2x (M6 x 12)
2x (M6 x 40)
MODUL-SYSTEM
3014_04
1
2
3
Max. 11 Nm

MODUL-SYSTEM 3063_02

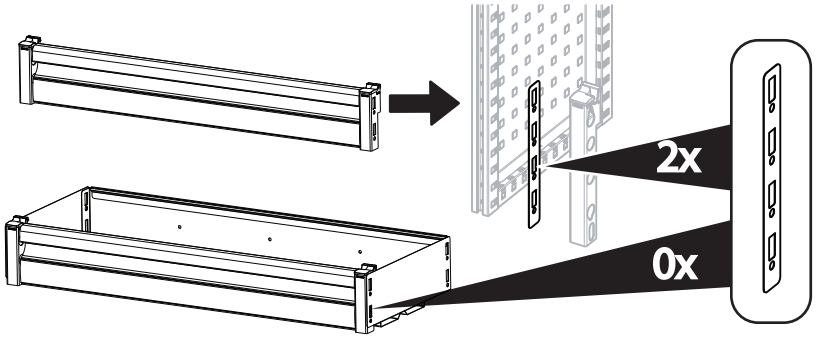

1

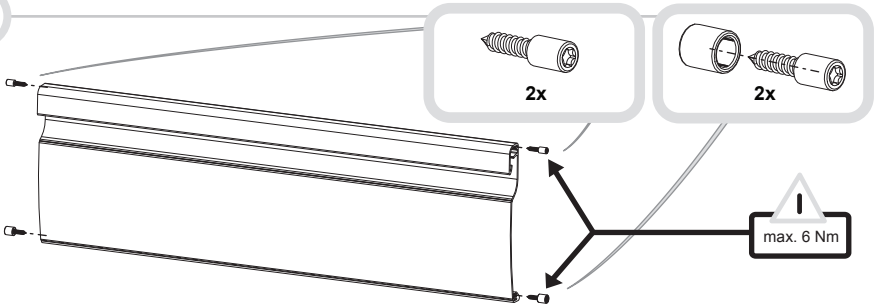

2a

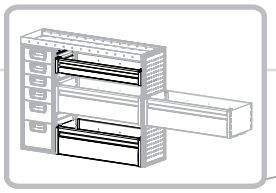

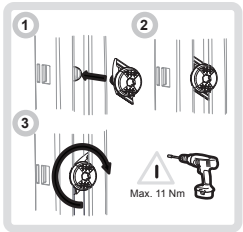

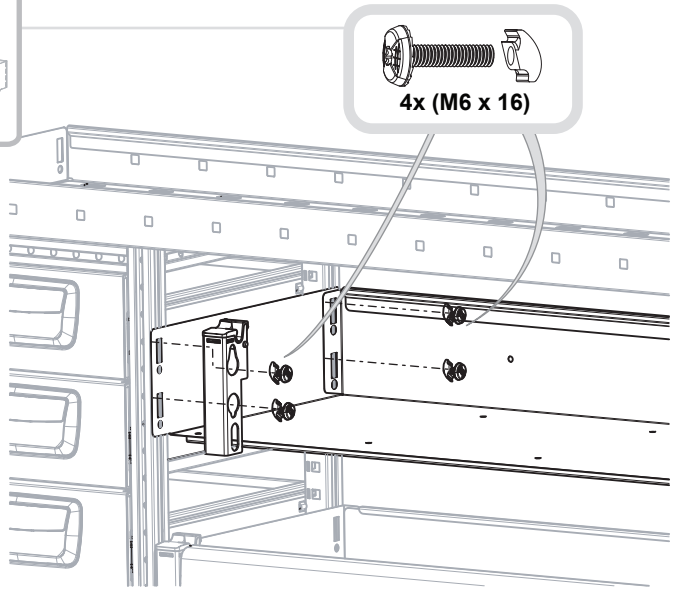

2b

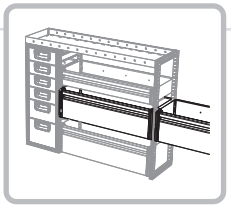

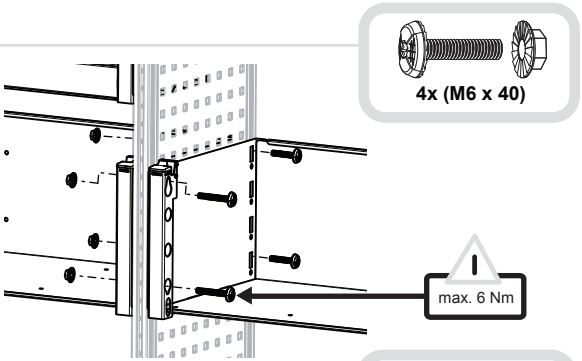

2c

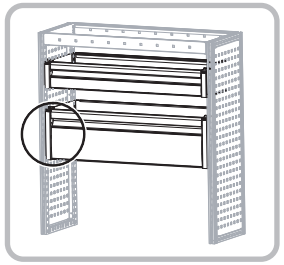

3

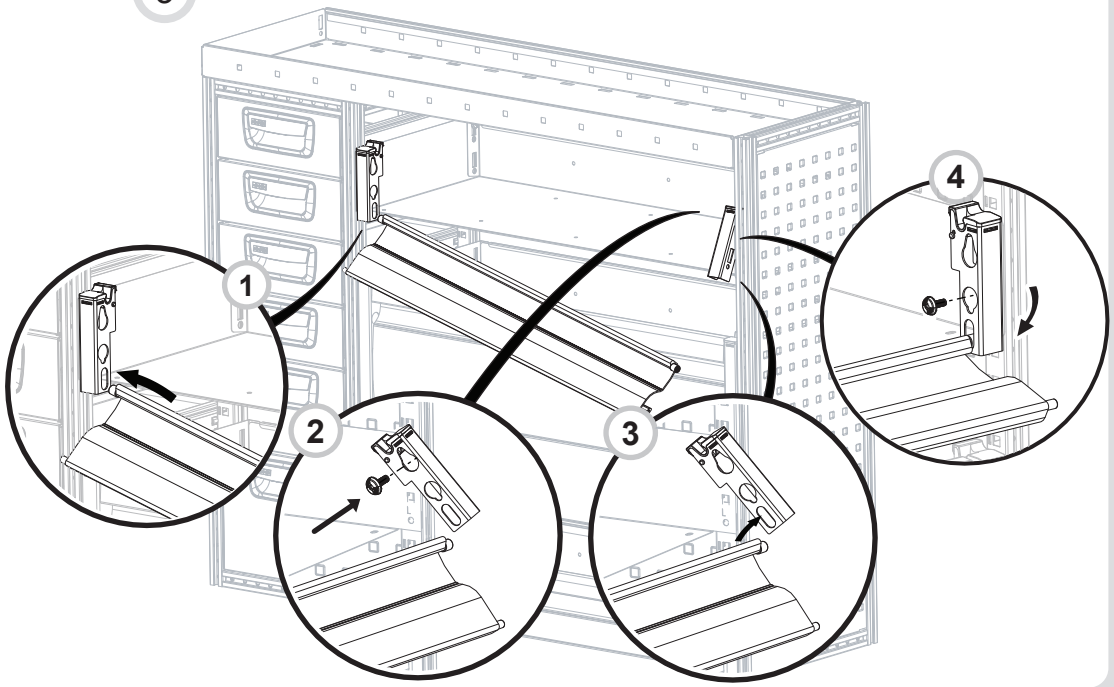

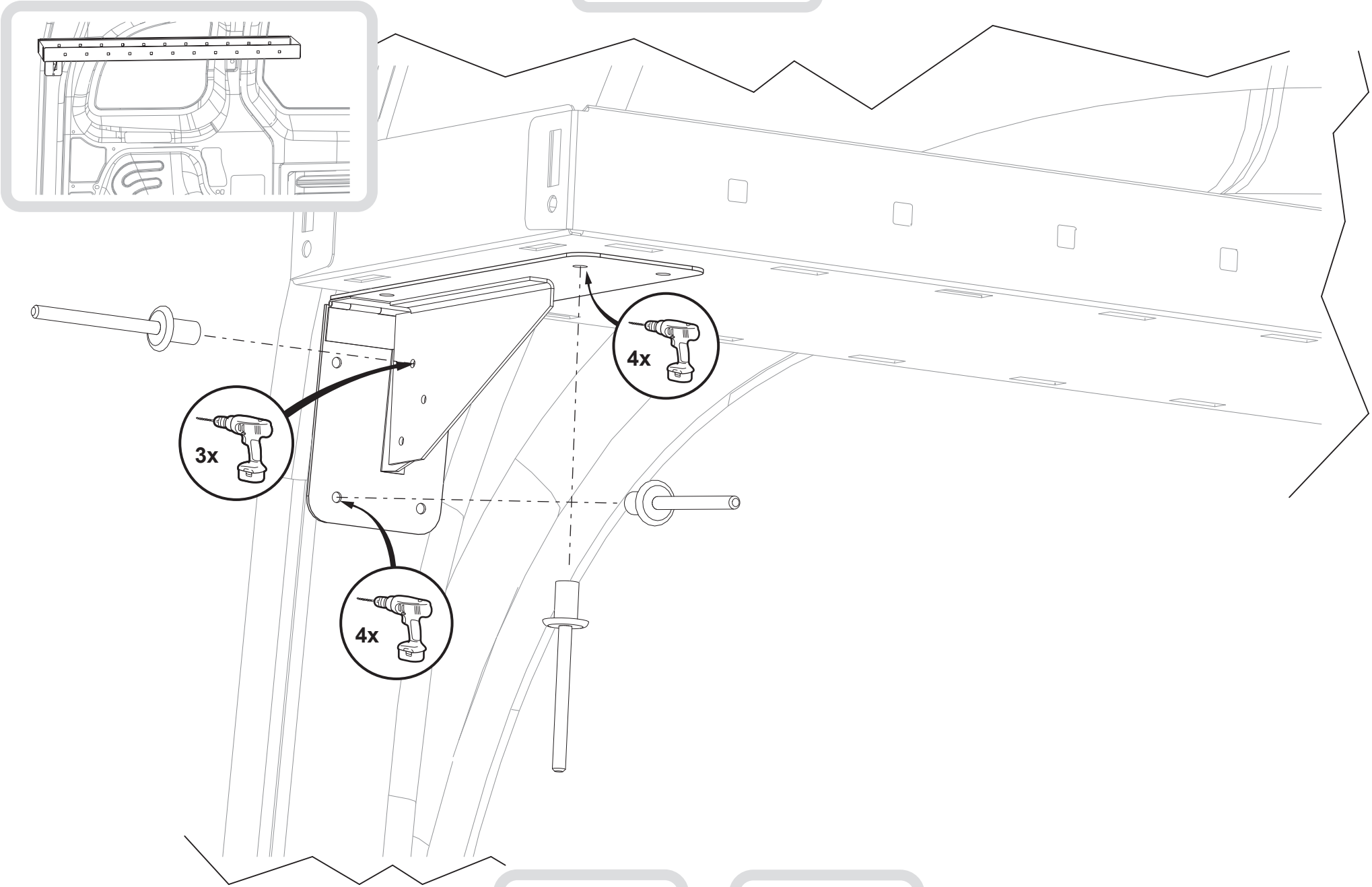

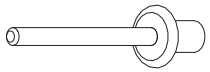

11x (4.8 x 8)

Ø 5 mm

MODUL-SYSTEM 3021_03

1

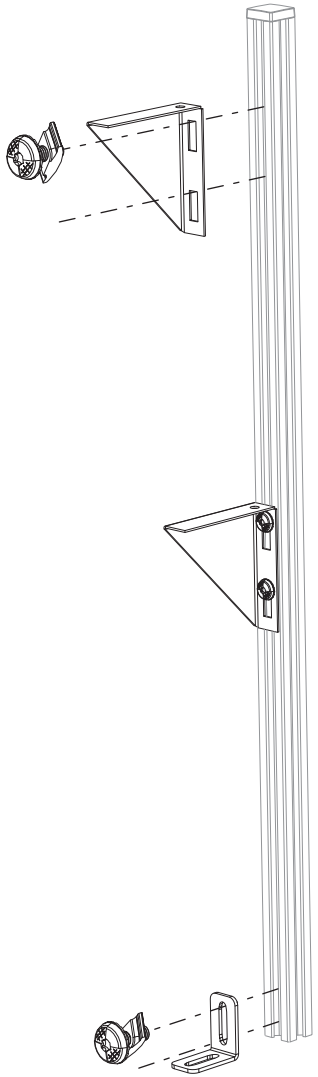

6x (M6 x 16)

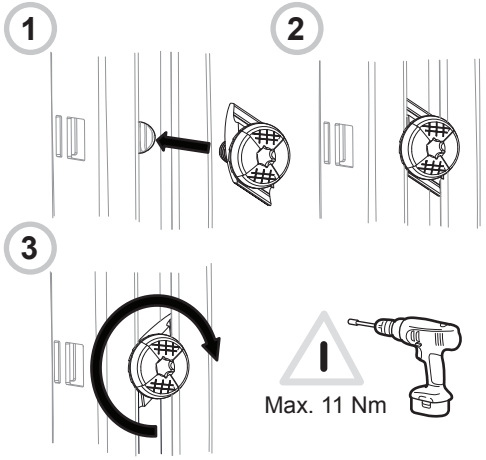

2

1x (M6 x 12)

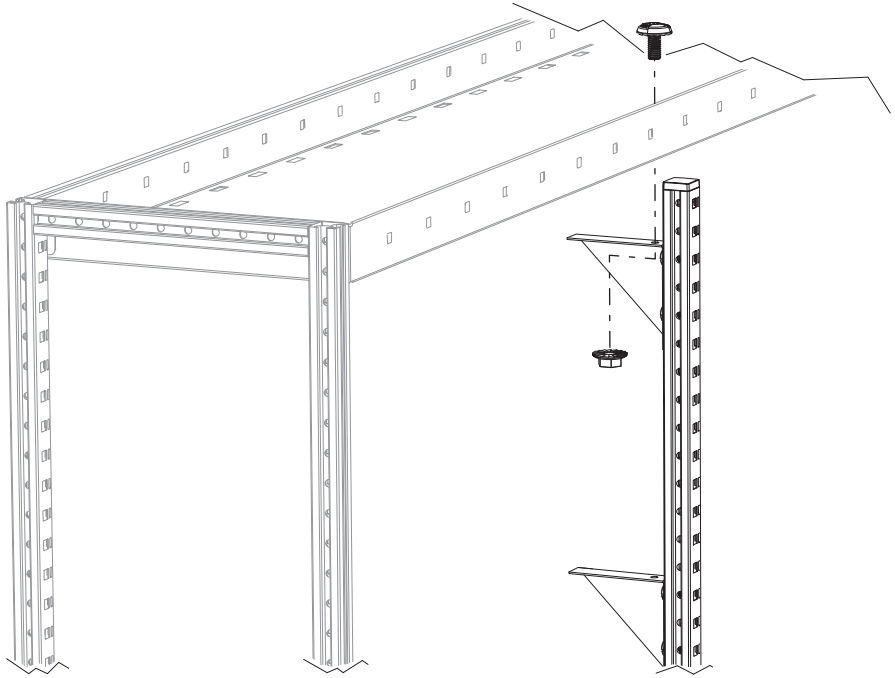

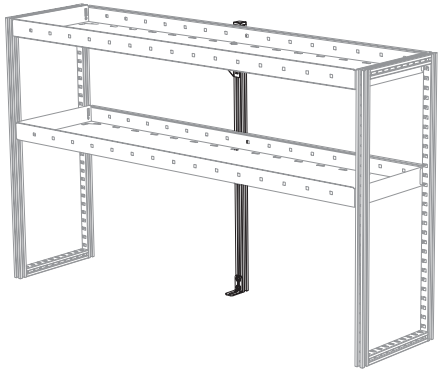

MODUL-SYSTEM 3124_05

1

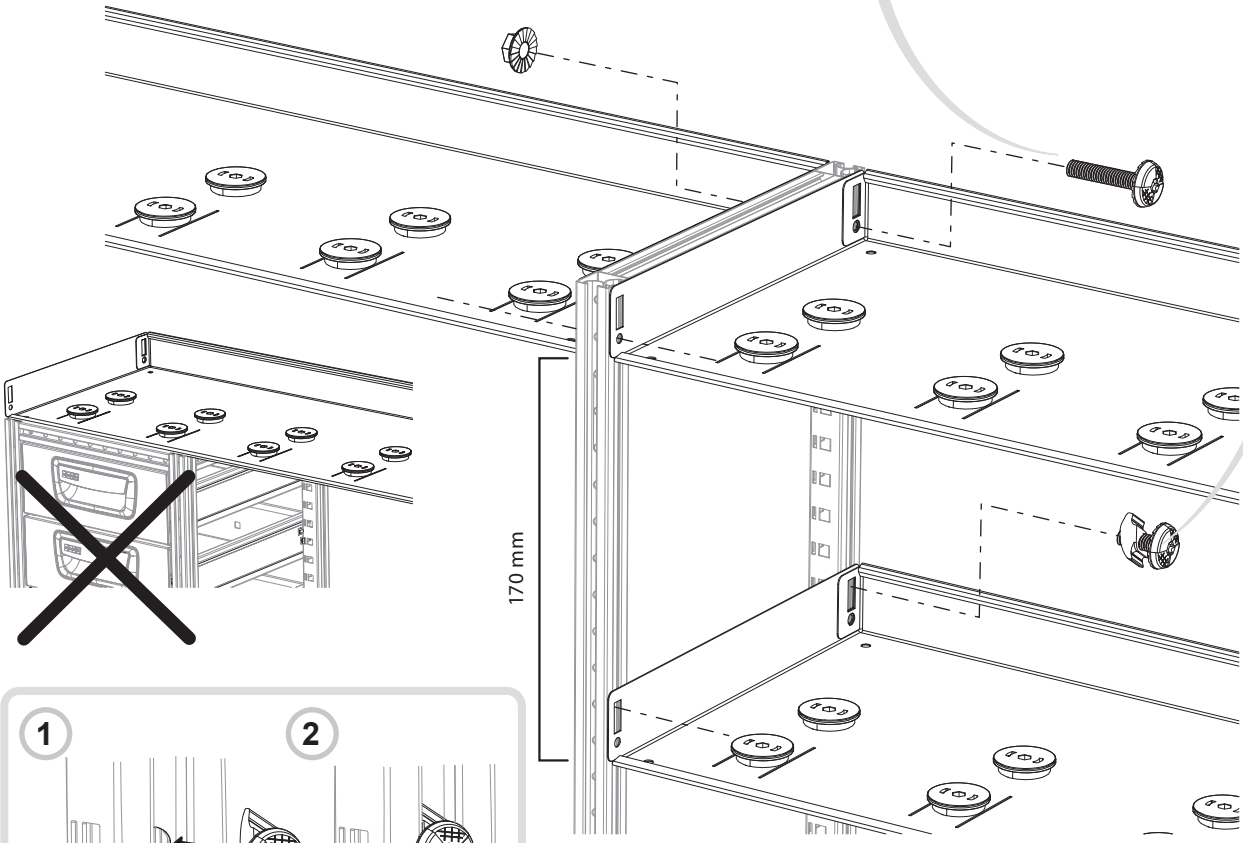

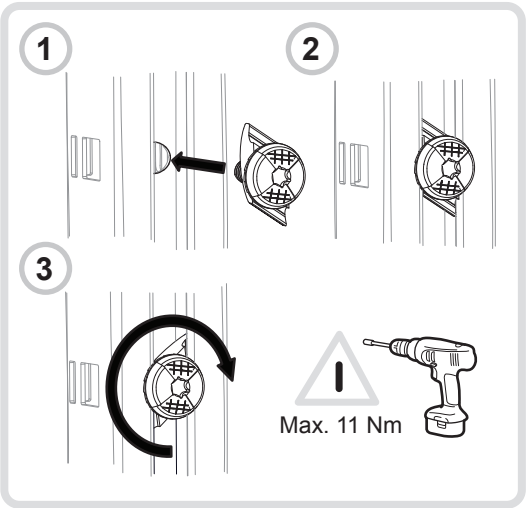

2

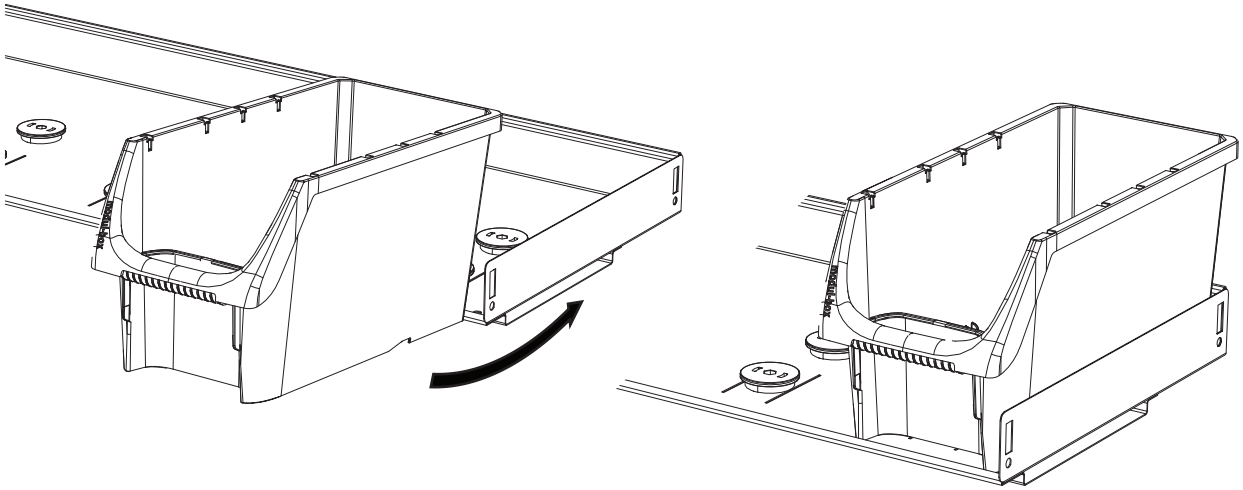

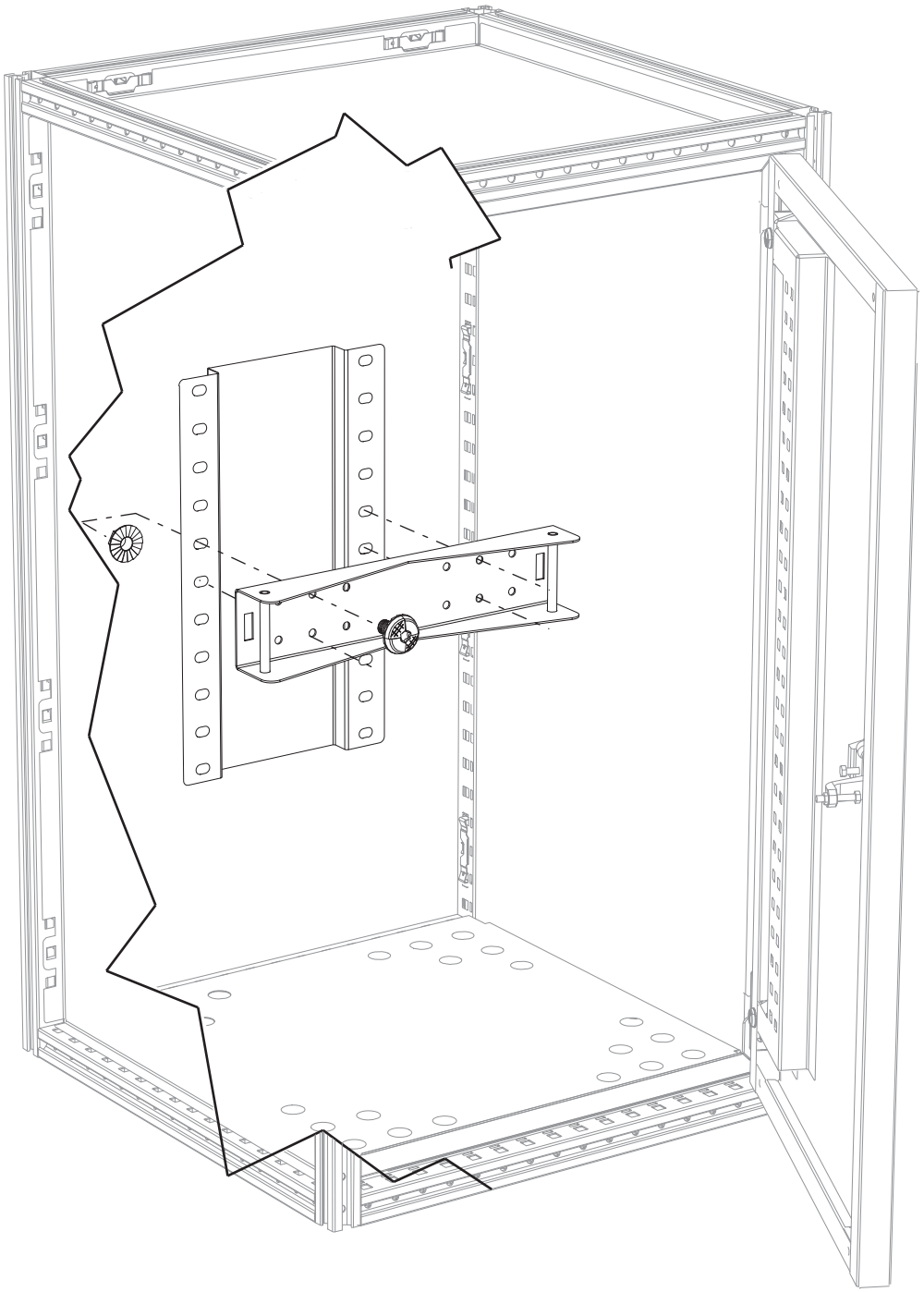

4x (M6 x 12)

MODUL-SYSTEM 3055_03

1

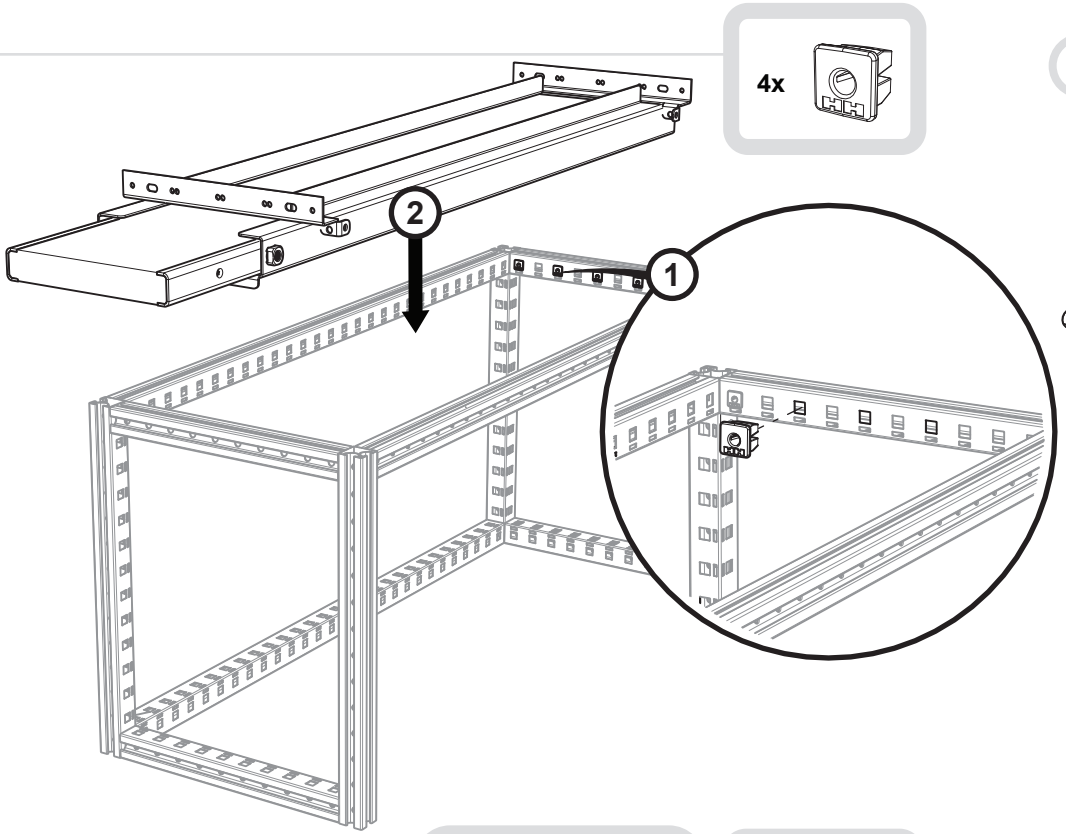

4x

3

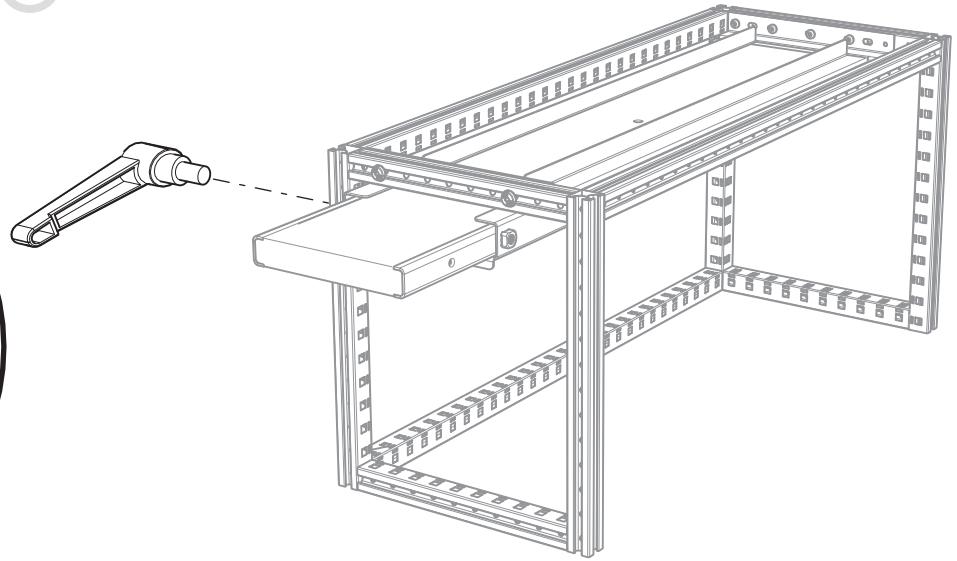

2

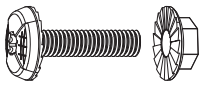

2x (M6 x 40)

4x

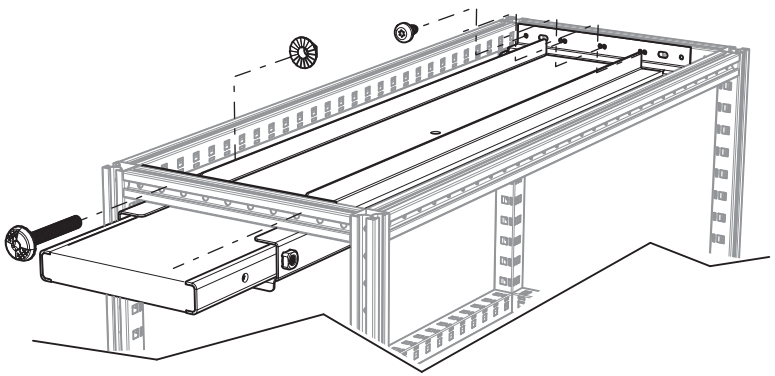

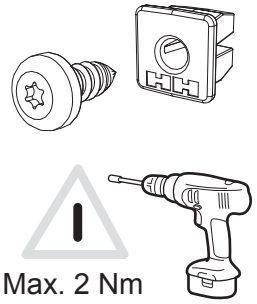

MODUL-SYSTEM 3034_03

1

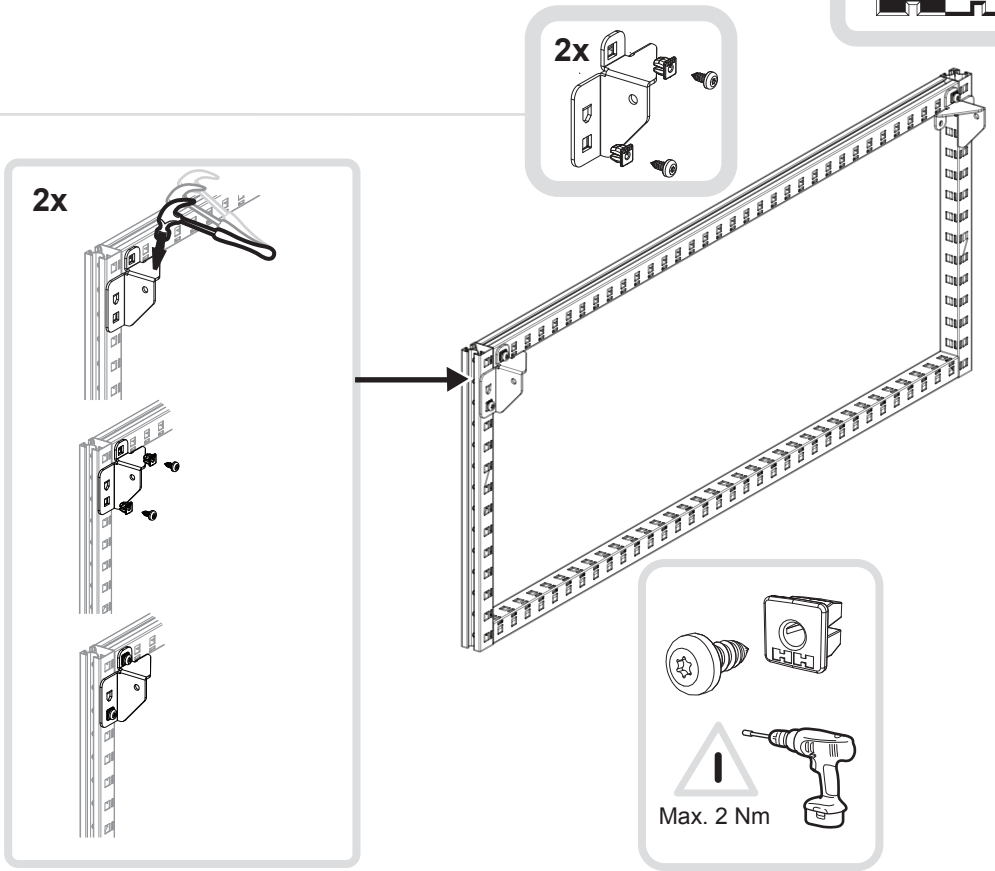

2

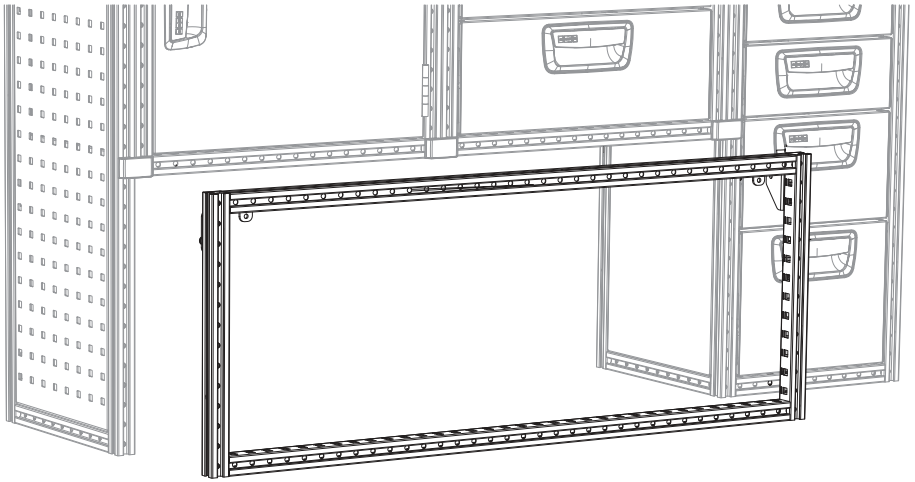

3

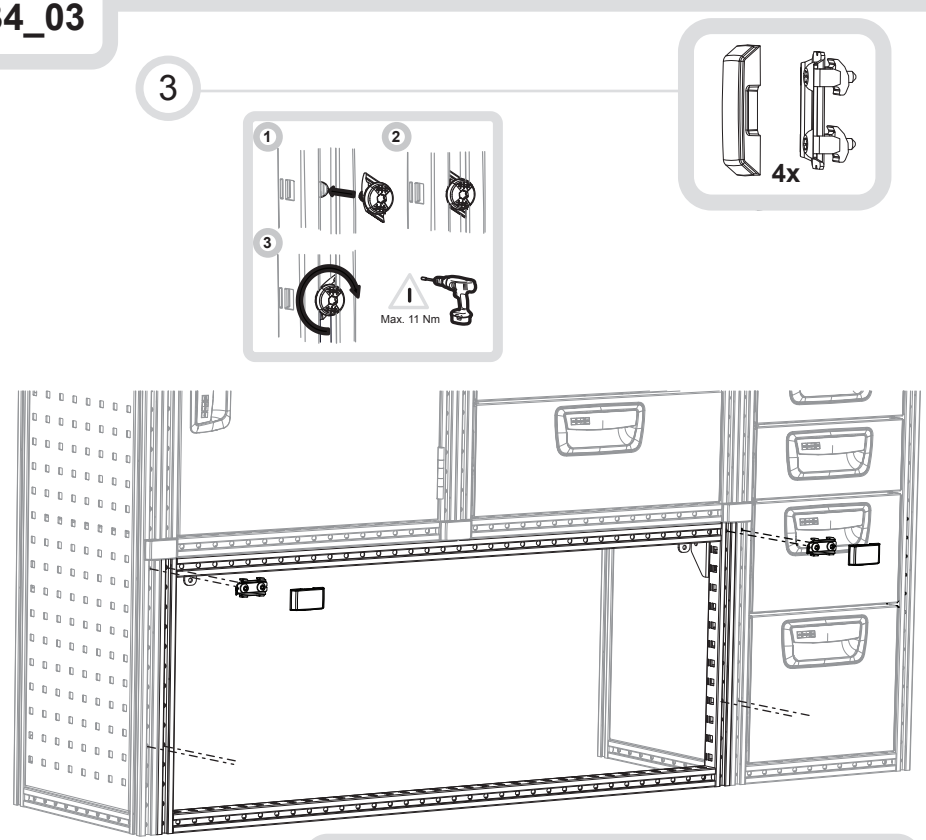

4

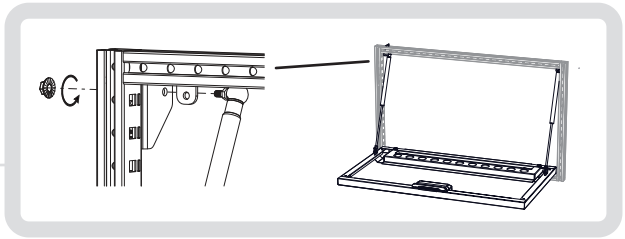

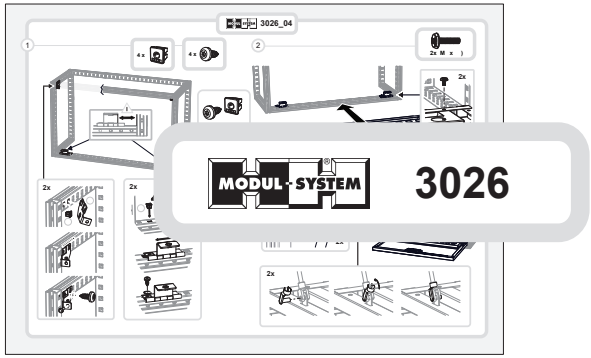

MODUL-SYSTEM 3026_04

1

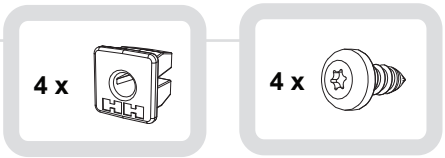

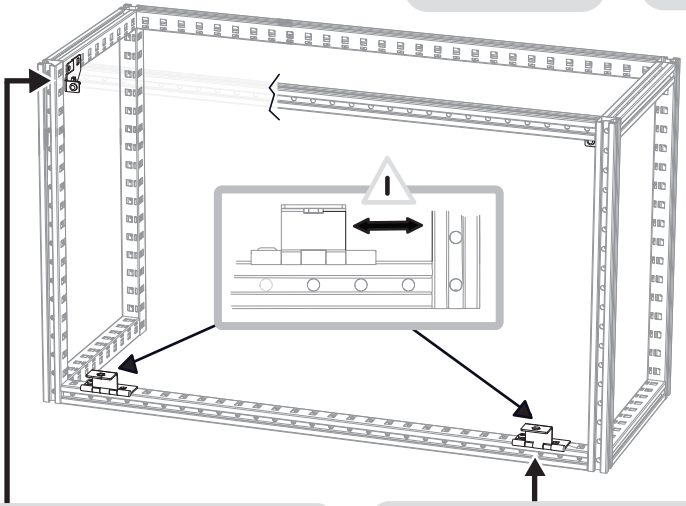

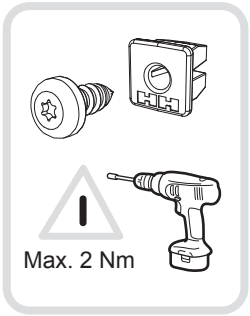

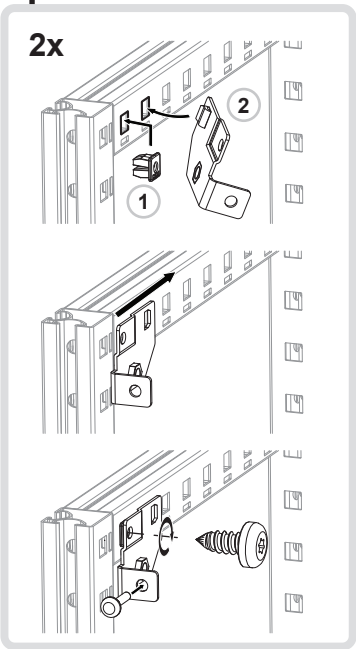

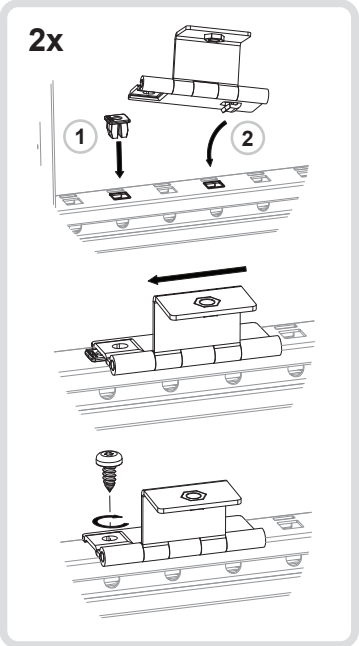

2

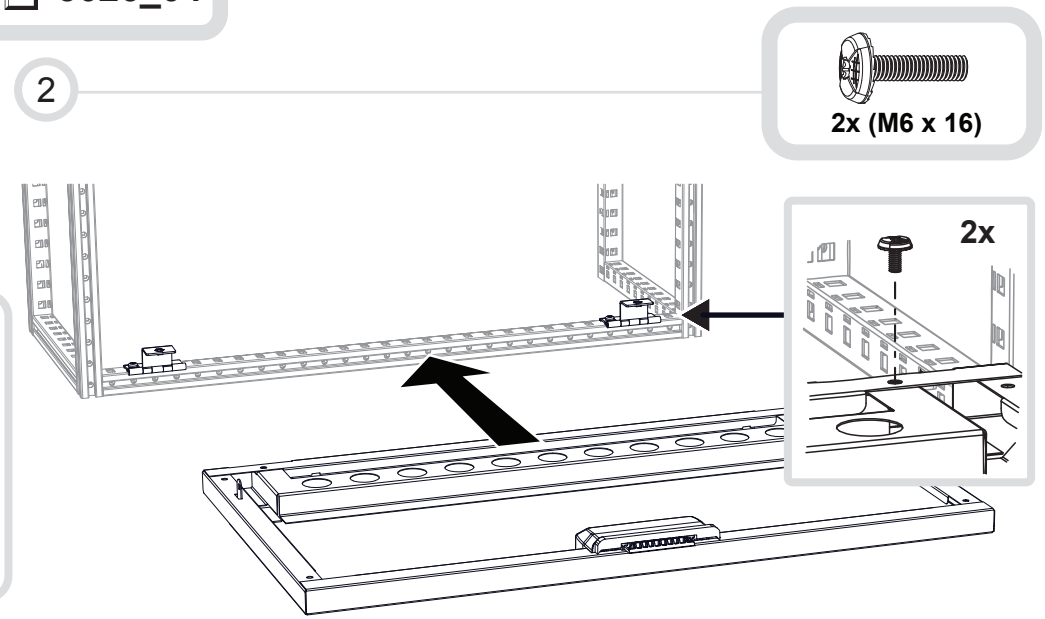

3

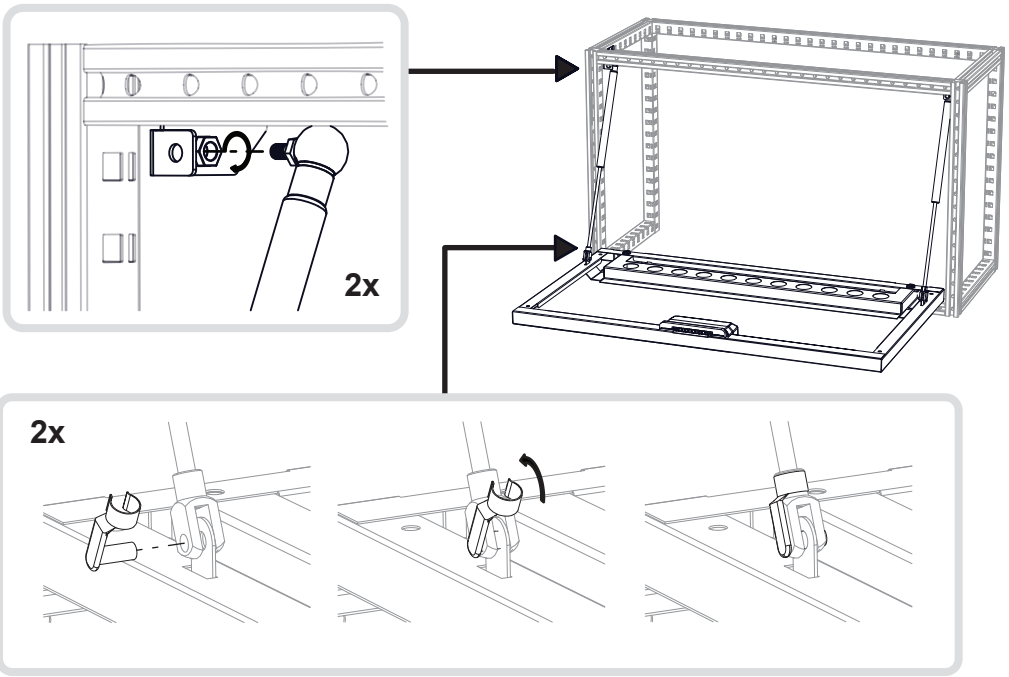

MODUL-SYSTEM 3102_02

1

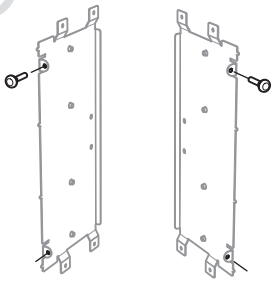

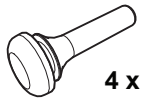

4 x

2

8 x

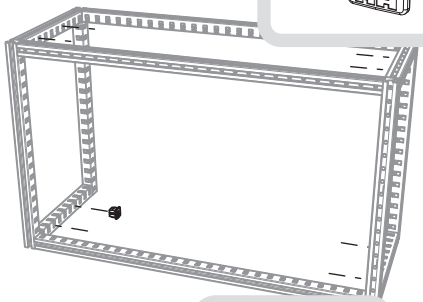

3

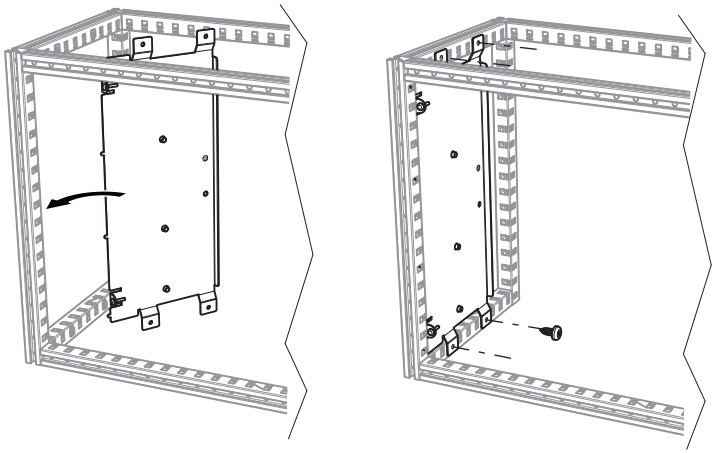

8 x

4

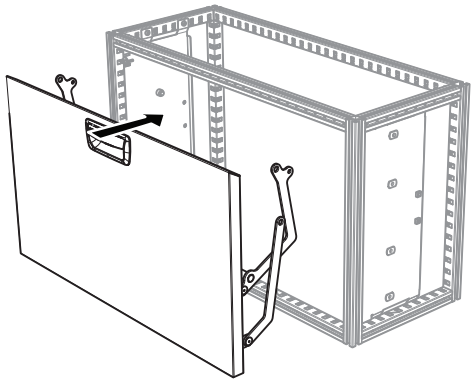

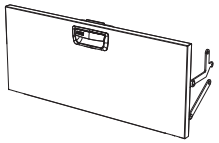

5

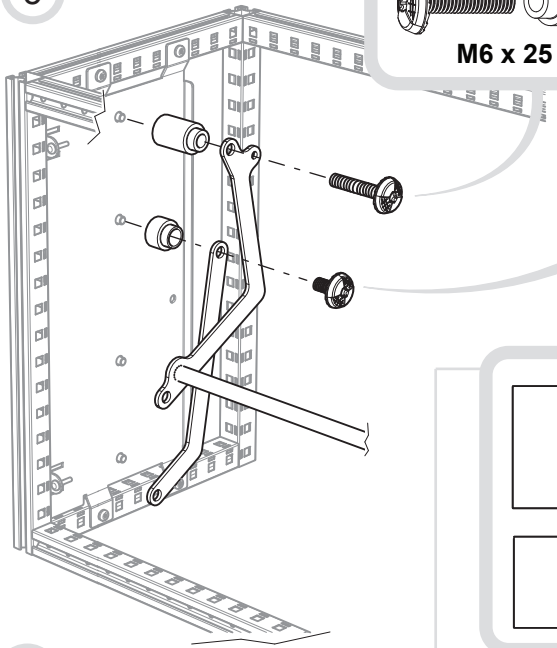

M6 x 25

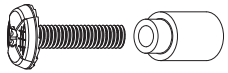

M6 x 16

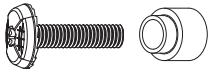

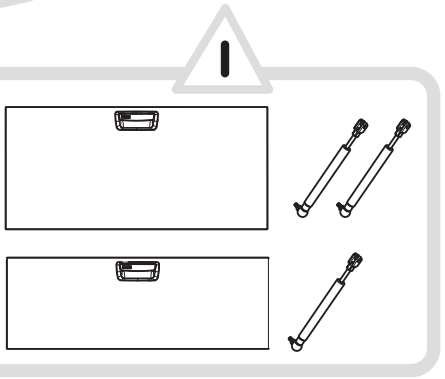

6

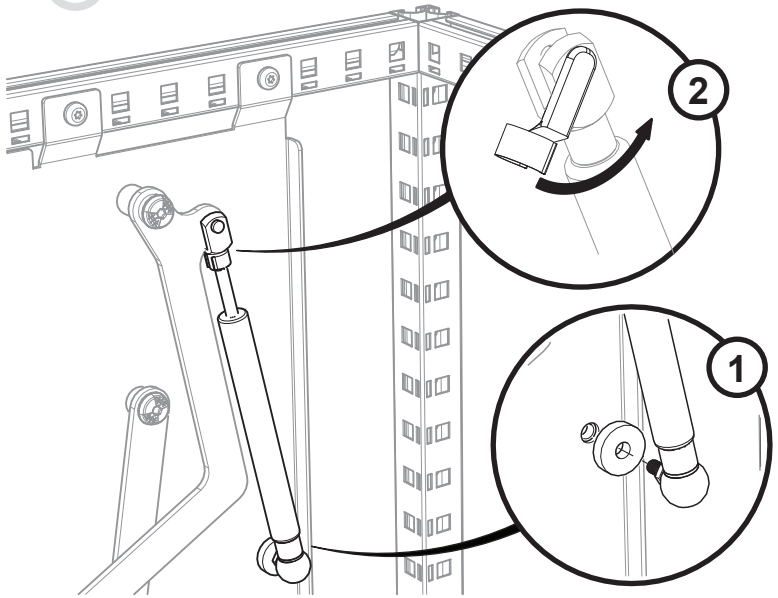

MODUL-SYSTEM 3029_03

1

4x (M6 x 40)

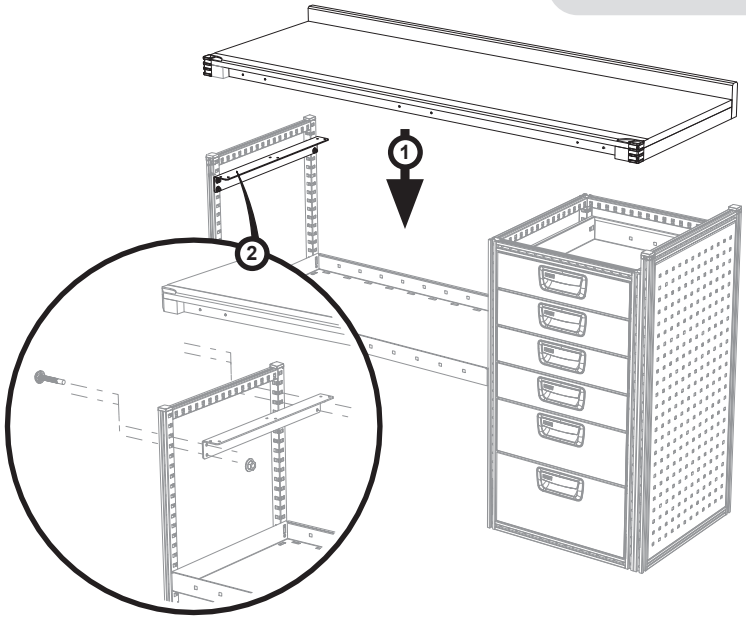

2

2x (M6 x 16)

2x (M6 x 25)

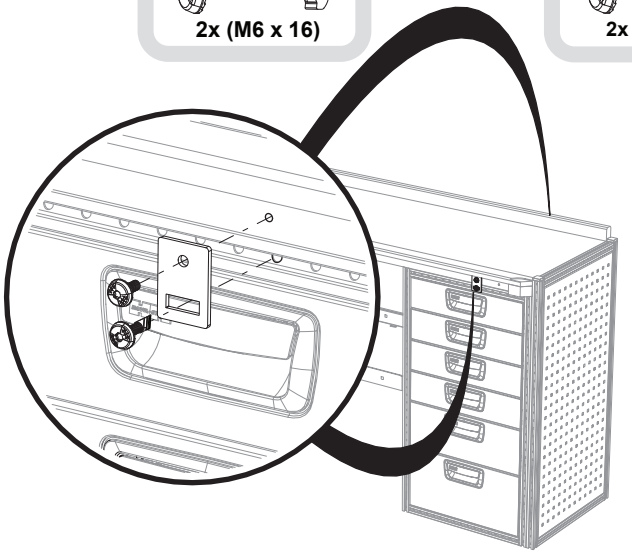

3

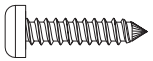

6x (4,2 x 16)

5x (3,5 x 16)

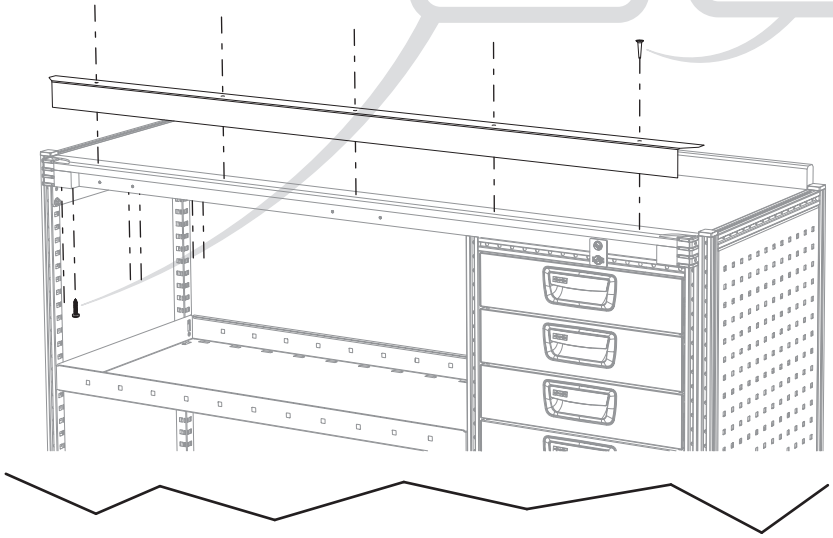

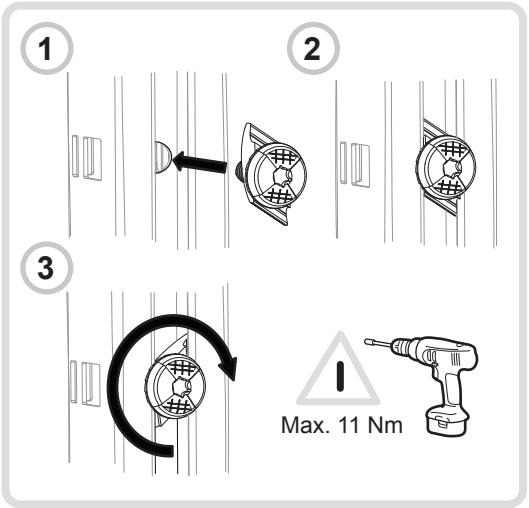

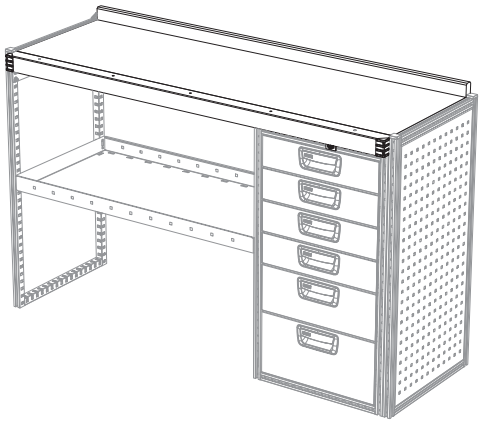

MODUL-SYSTEM 3118_03

1

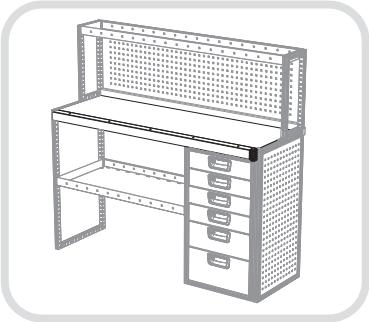

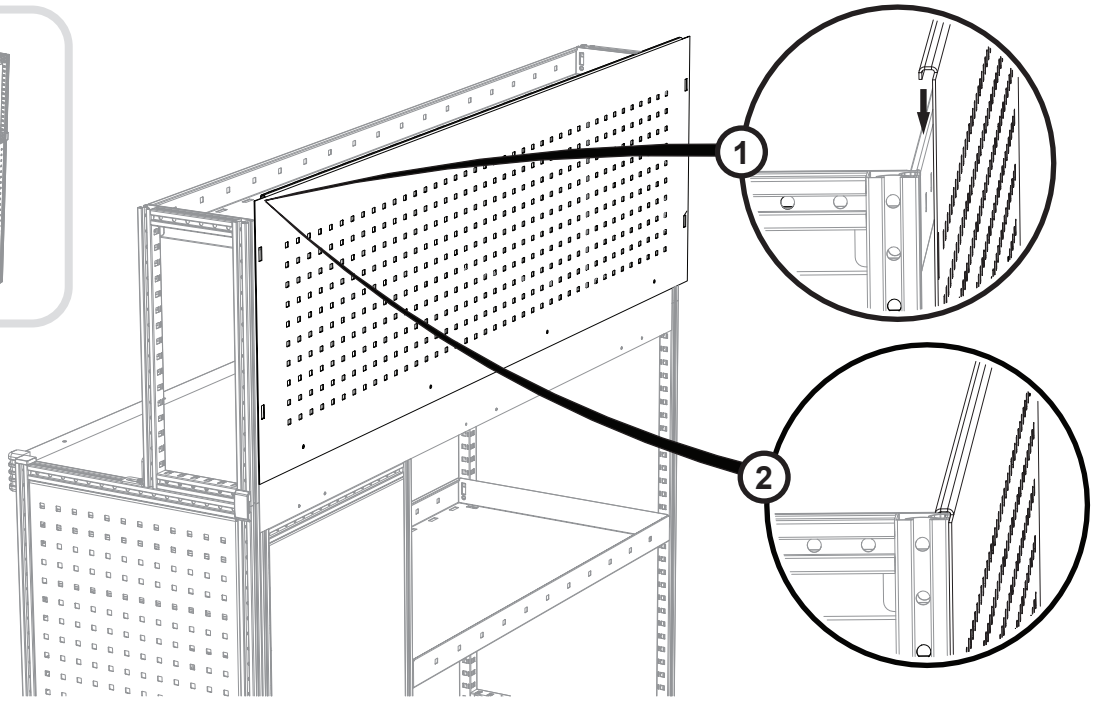

2

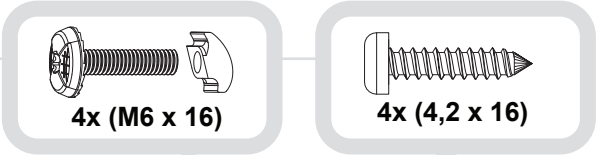

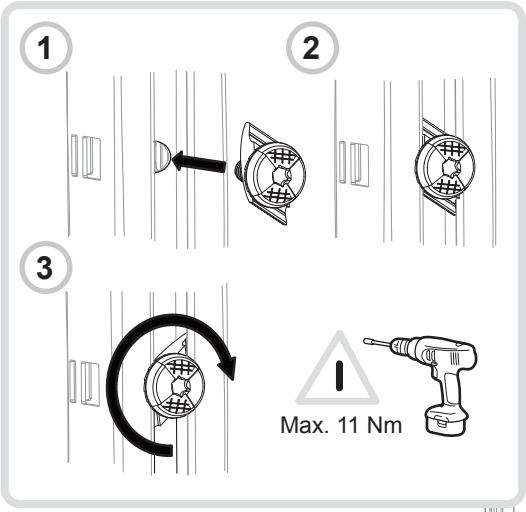

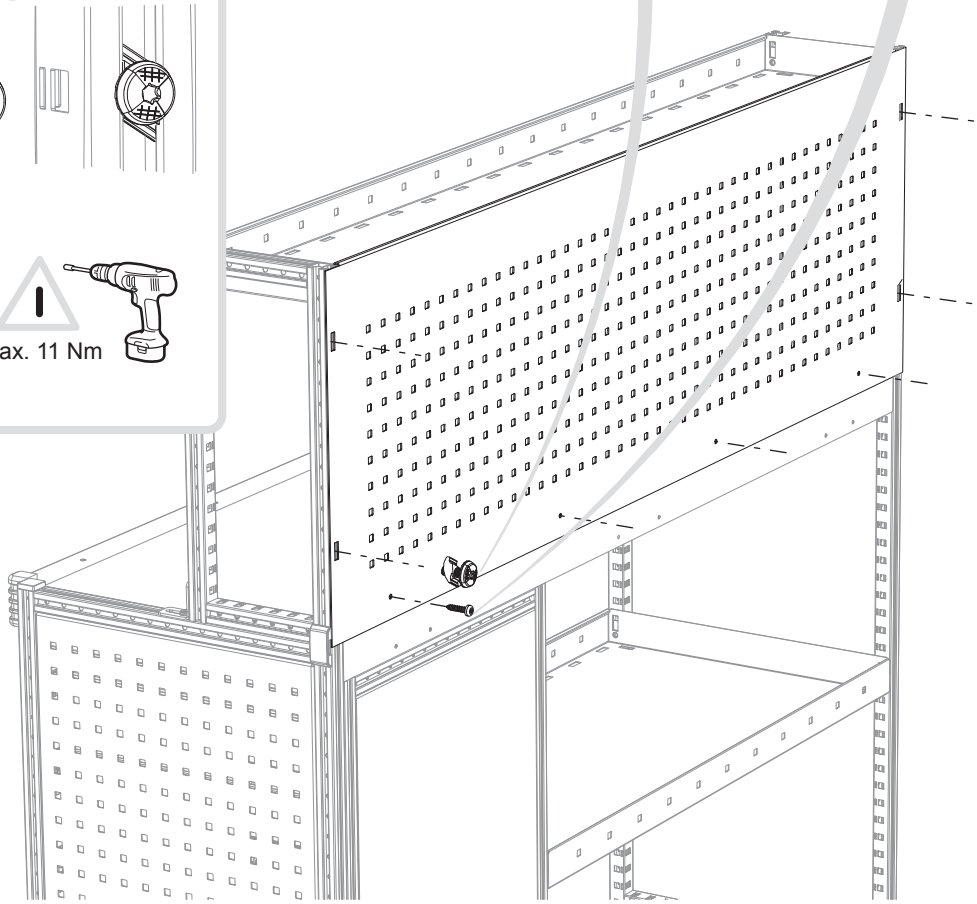

MODUL-SYSTEM 3070_1

1

Alternative

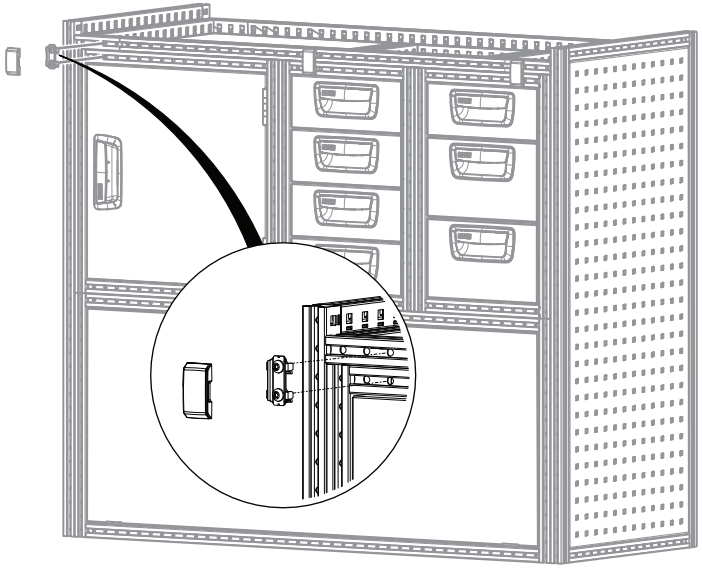

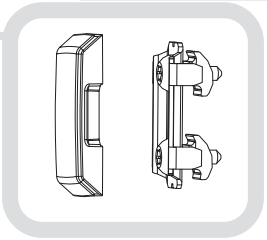

2

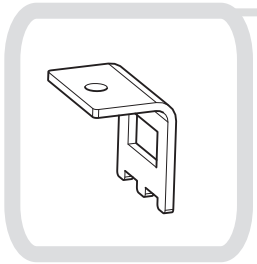

M6 x 16

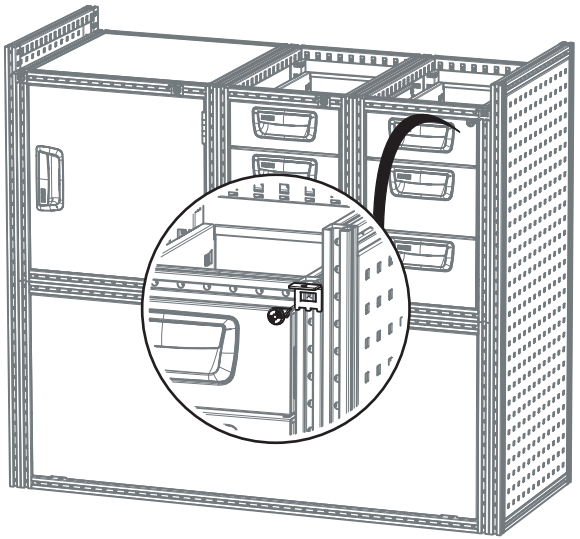

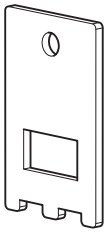

M6 x 16

3

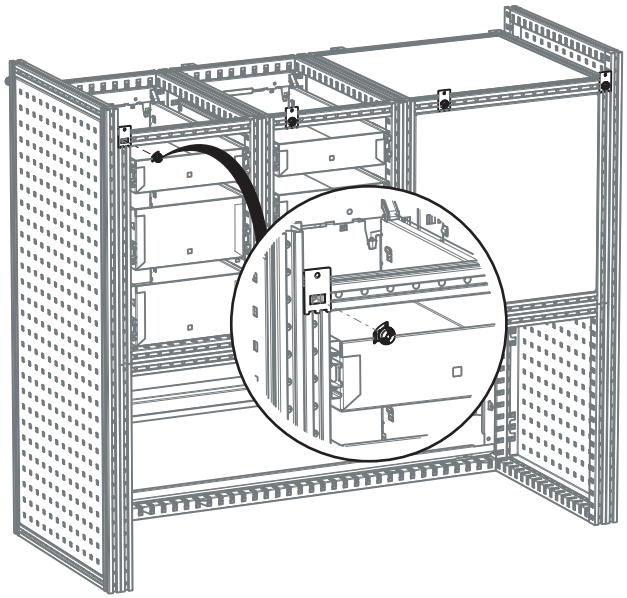

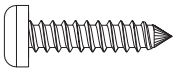

4,2 x 16

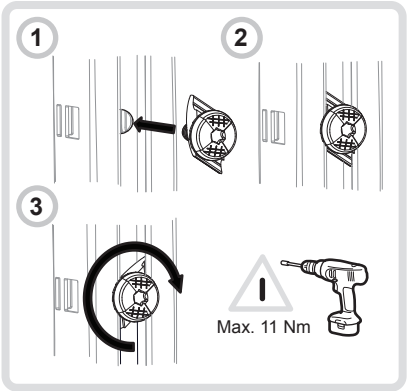

4

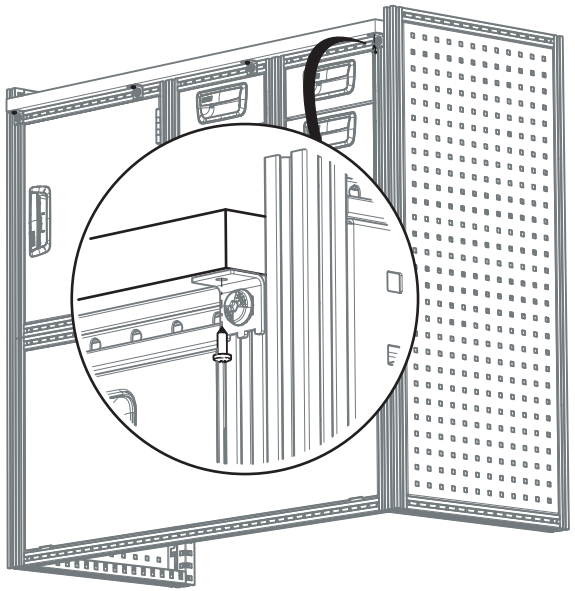

MODUL-SYSTEM

1011_3

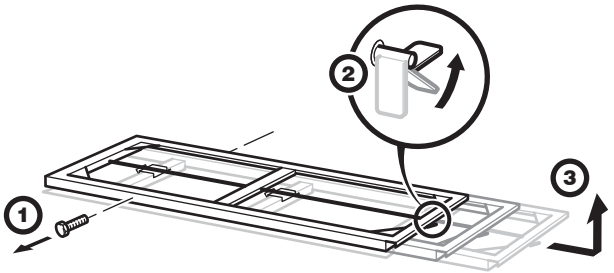

1

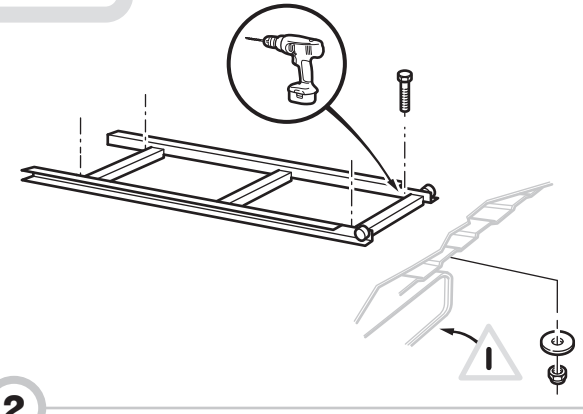

2

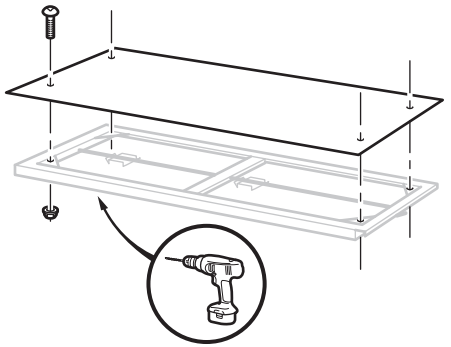

3

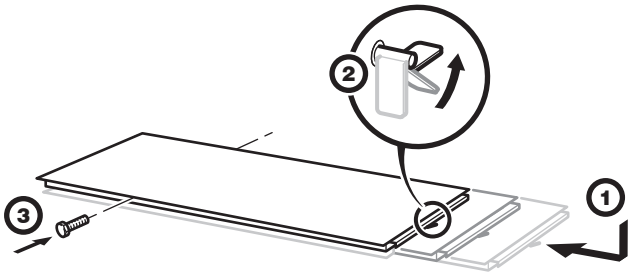

4

4x (M6 x 20) ∅ 7

4x (M8) ∅ 9

MODUL-SYSTEM 3045_01

1

8x (M6 x 16)

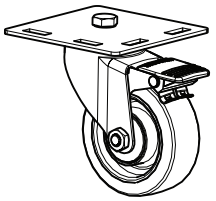

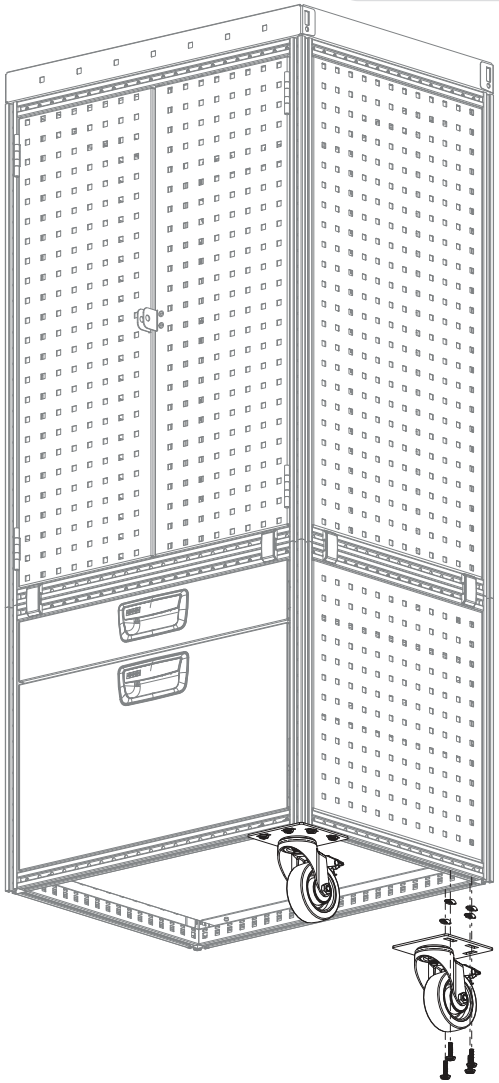

2

8x (M6 x 16)

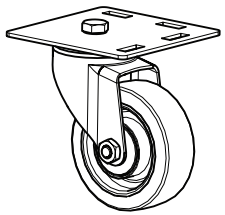

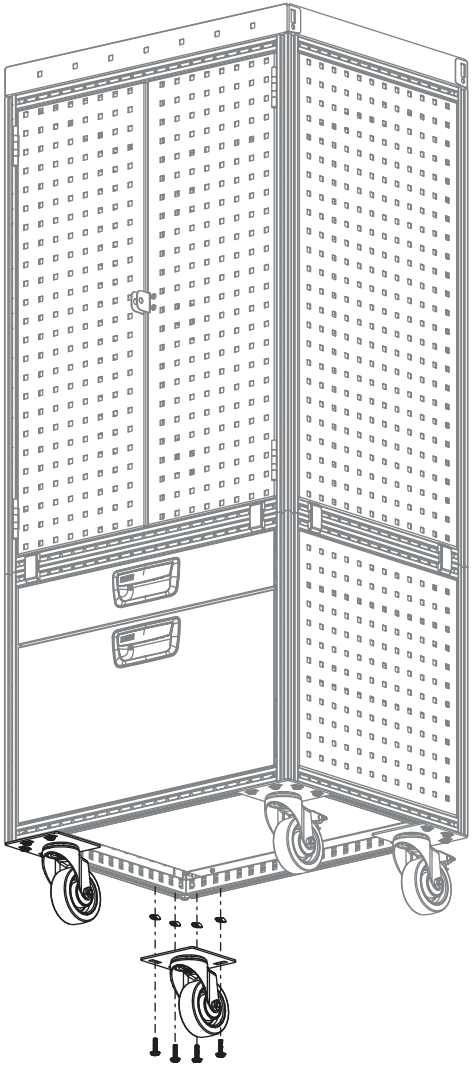

Kangoo Express

MODUL-SYSTEM 3119_01

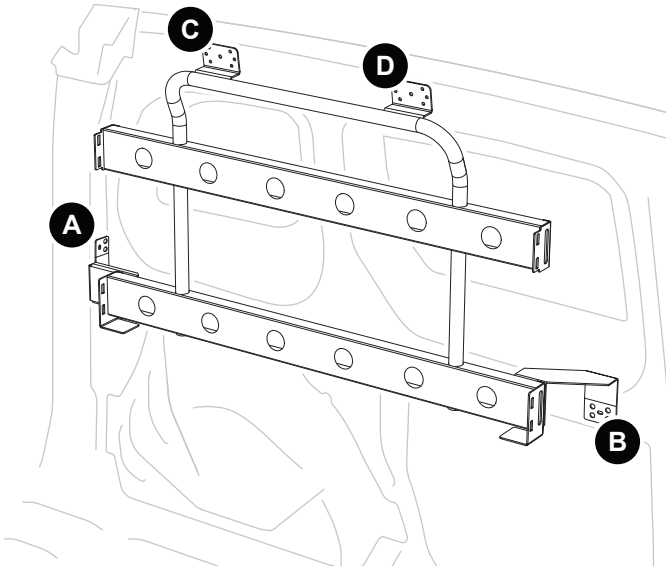

1

VHB Cleaner

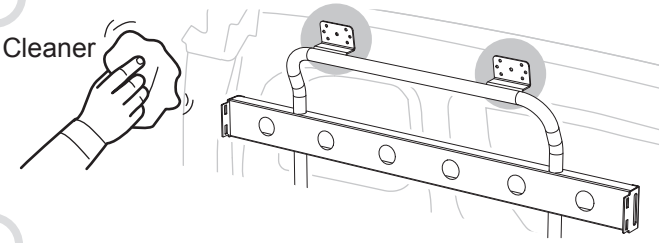

2

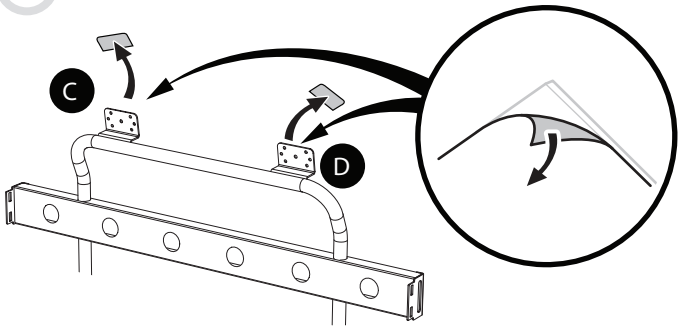

3

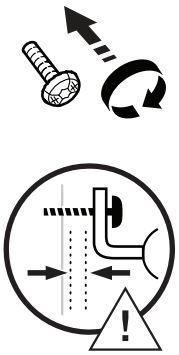

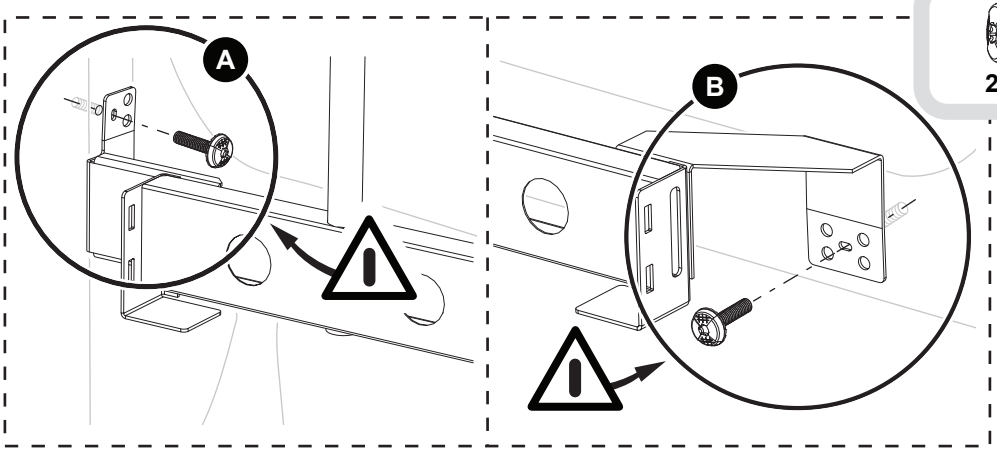

2x (M6x 25)

4

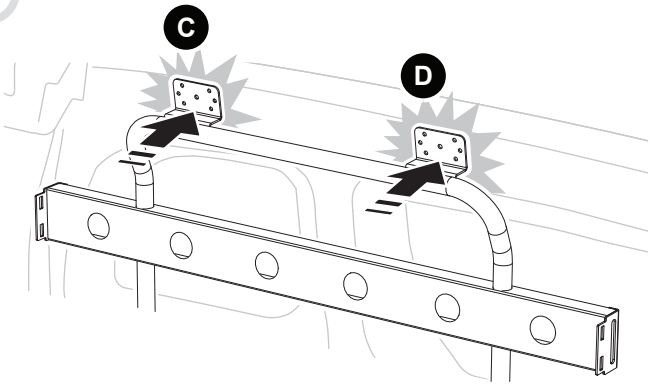

5

2000-4500 rpm
Torx T30

12x (M6x18 FDS)

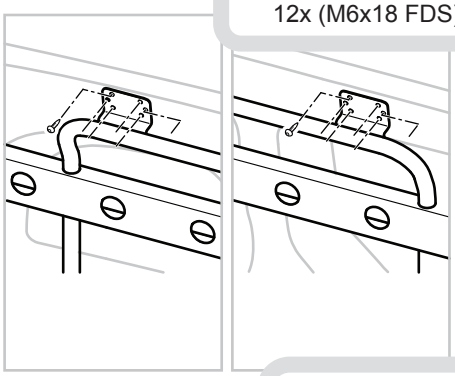

6

11 Nm

A + B

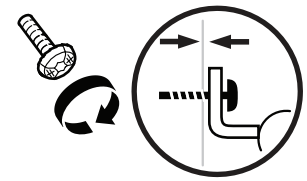

7

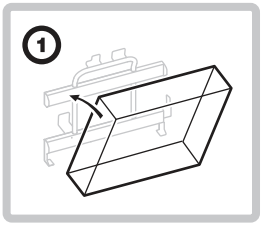

8x (M6 x 16)

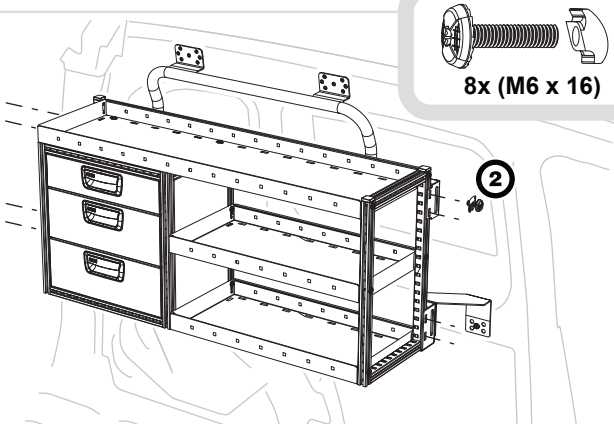

Kangoo Express

MODUL-SYSTEM 3121_01

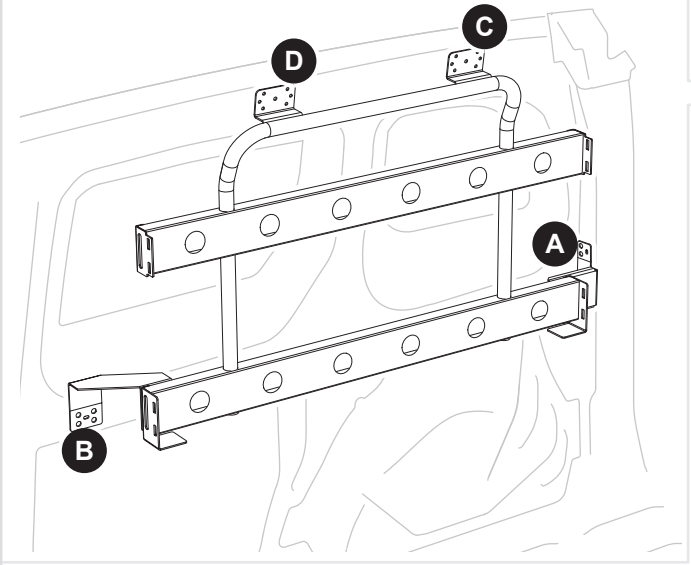

1

VHB Cleaner

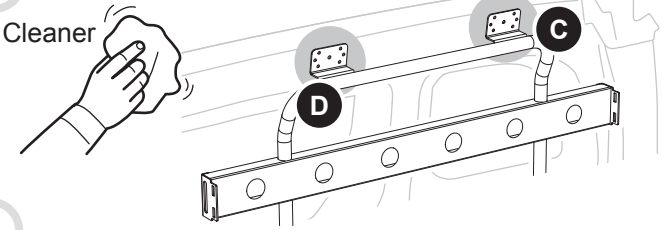

2

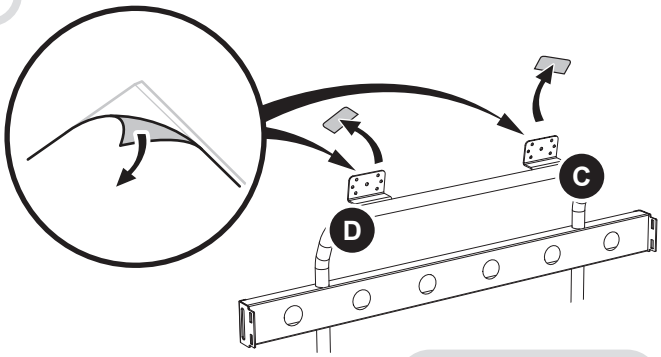

3

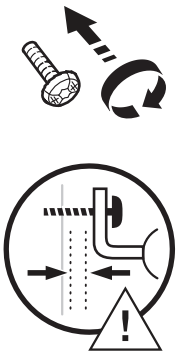

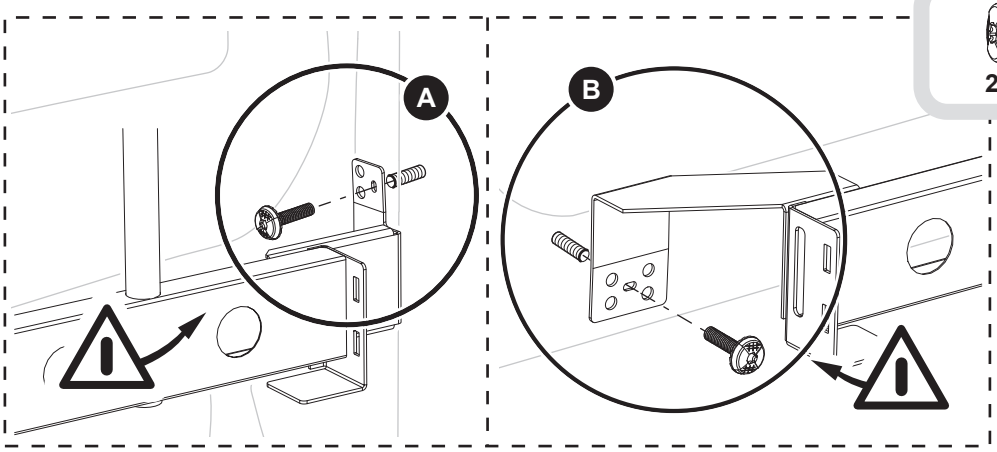

2x (M6x 25)

4

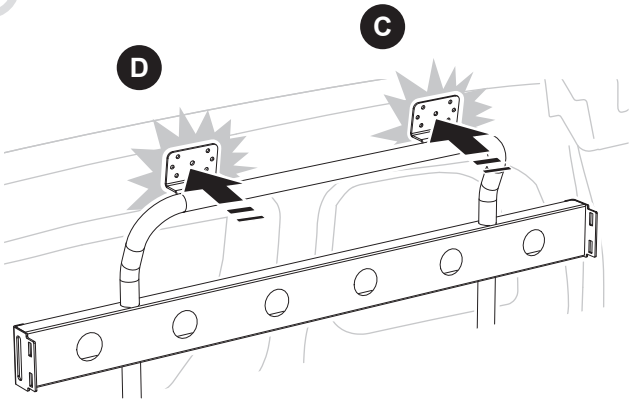

5

4,5 Nm
12x (M6x18 FDS)

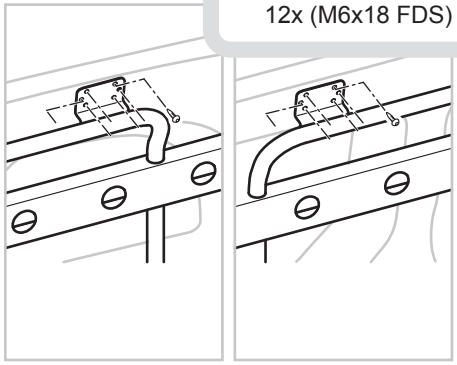

6

11 Nm

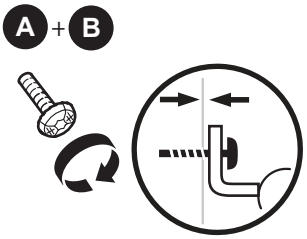

7

8x (M6 x 16)

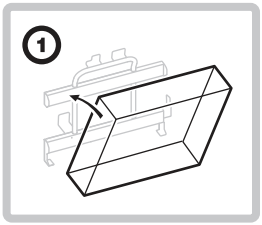

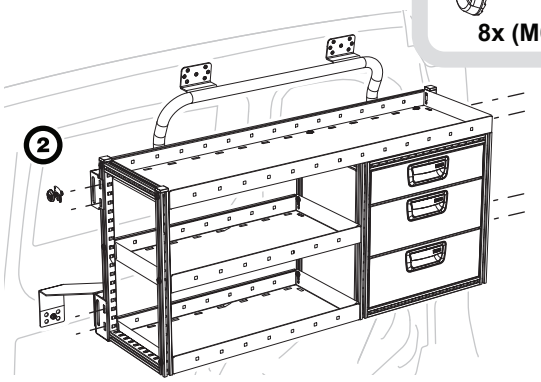

Kangoo Express

MODUL-SYSTEM 3122_01

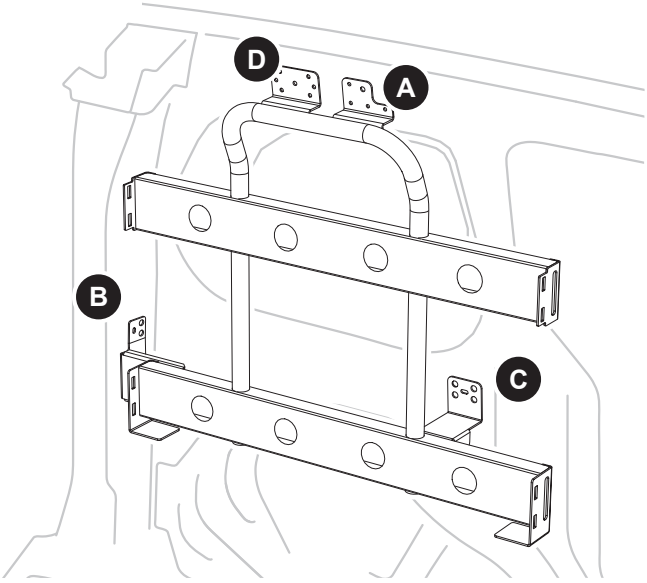

1

VHB Cleaner

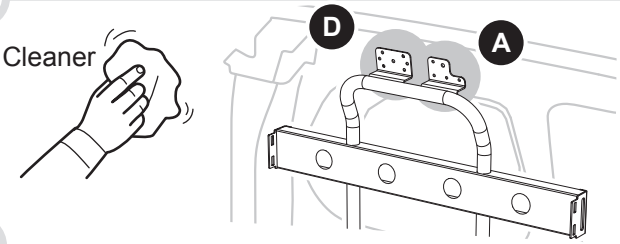

2

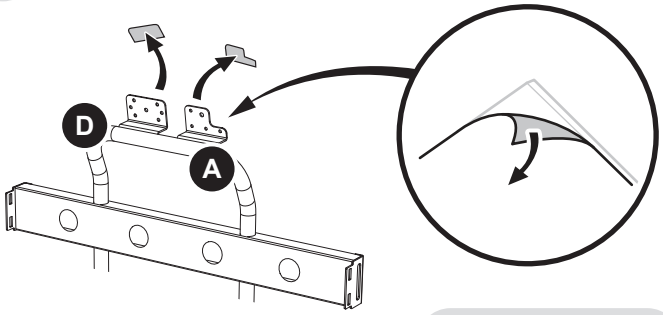

3

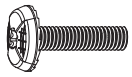

3x (M6x 25)

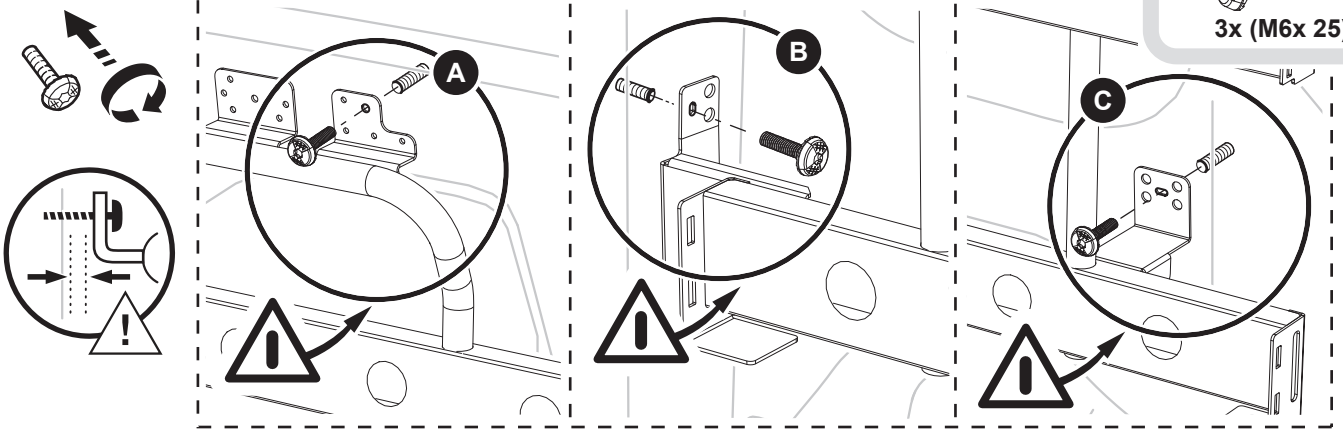

4

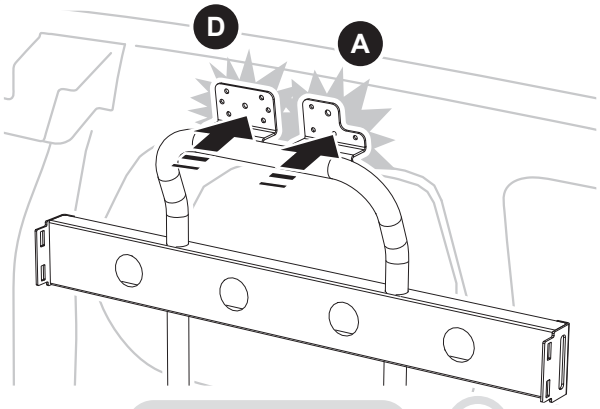

5

4,5 Nm

10x (M6x18 FDS)

2000-4500 rpm

Torx T30

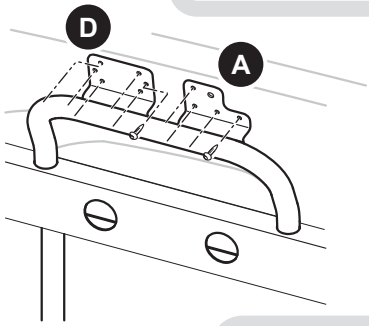

6

11 Nm

A + B + C

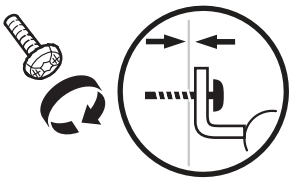

7

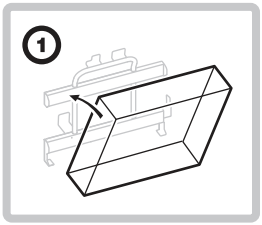

8x (M6 x 16)

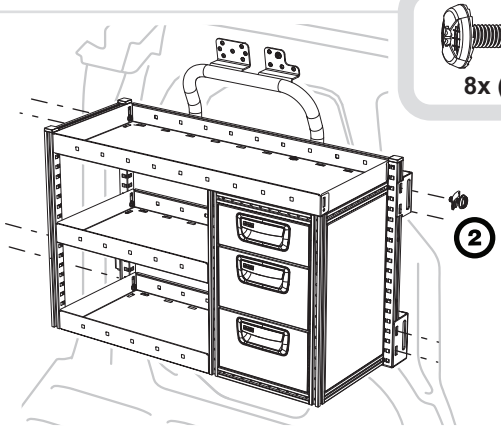

Kangoo Express

MODUL-SYSTEM 3125_01

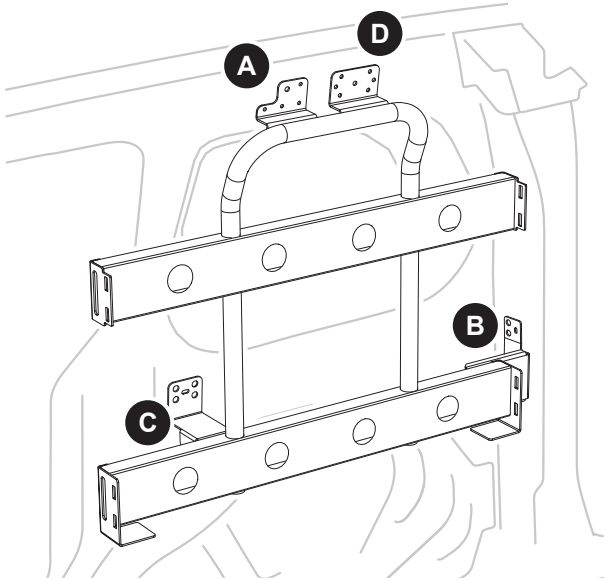

1

VHB Cleaner

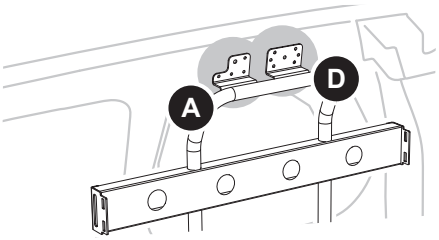

2

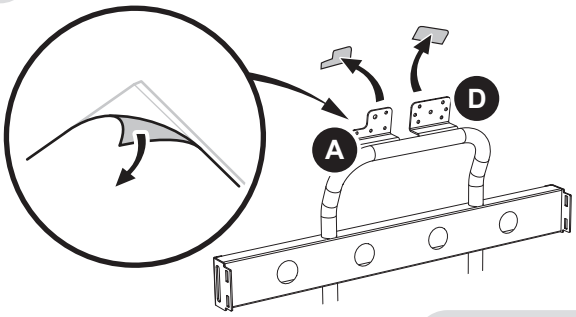

3

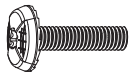

3x (M6x 25)

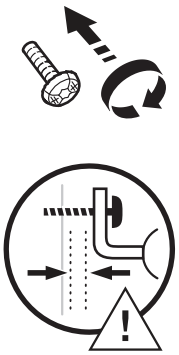

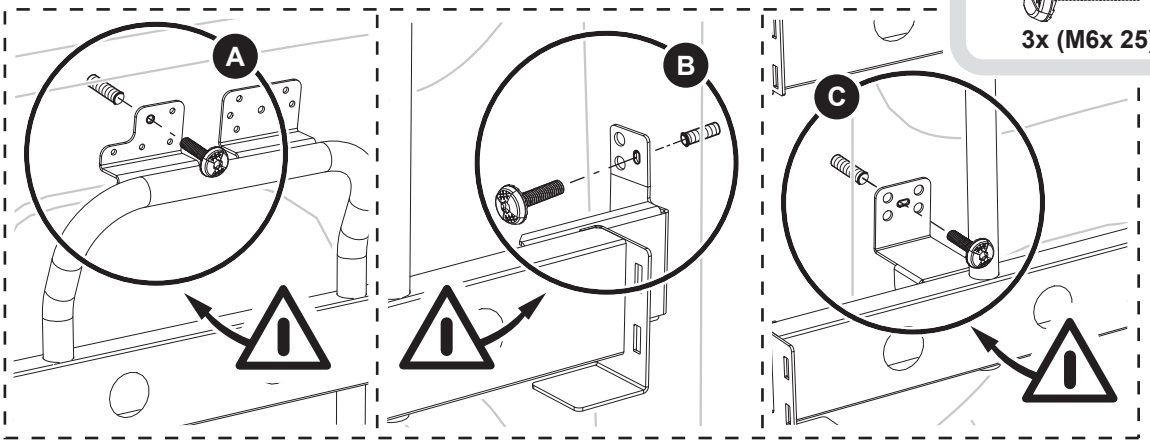

4

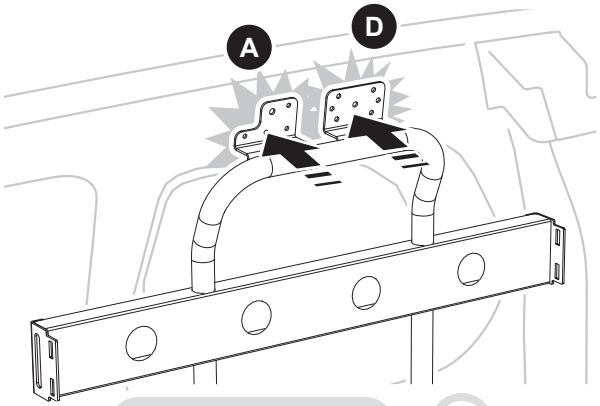

5

4,5 Nm

10x (M6x18 FDS)

2000-4500 rpm
Torx T30

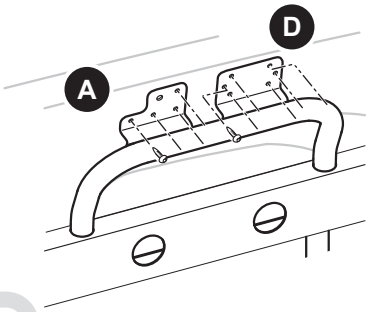

6

11 Nm

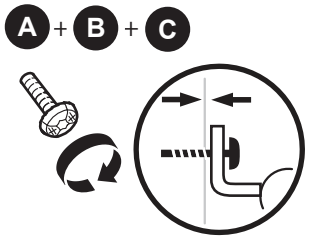

7

8x (M6 x 16)

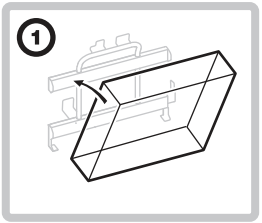

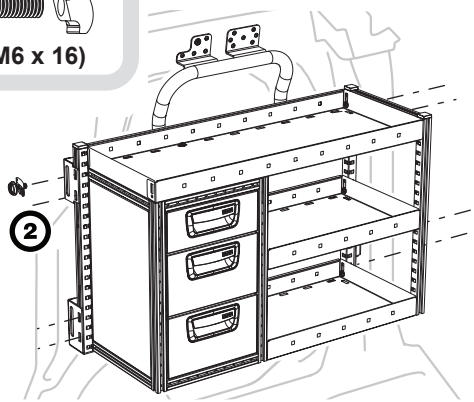

Berlingo | Partner

MODUL-SYSTEM 3131_01

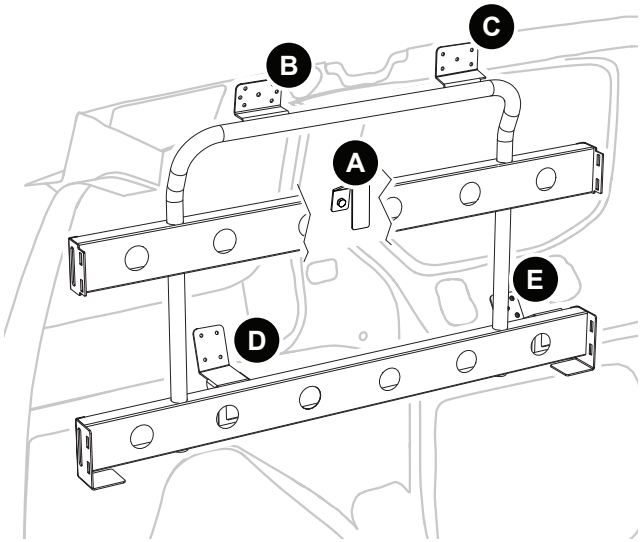

1

VHB Cleaner

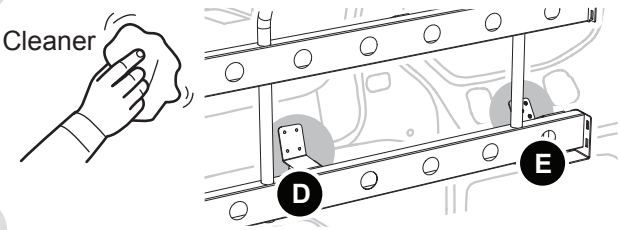

2

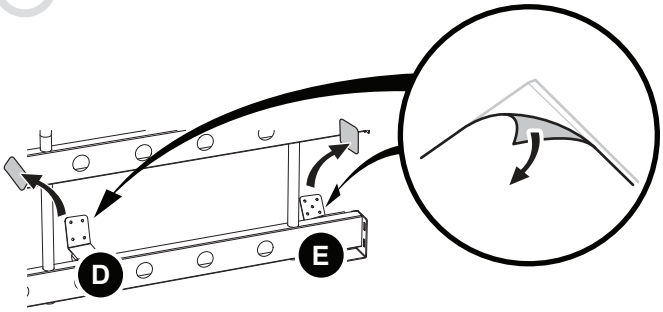

3

1x (M10 x 25)

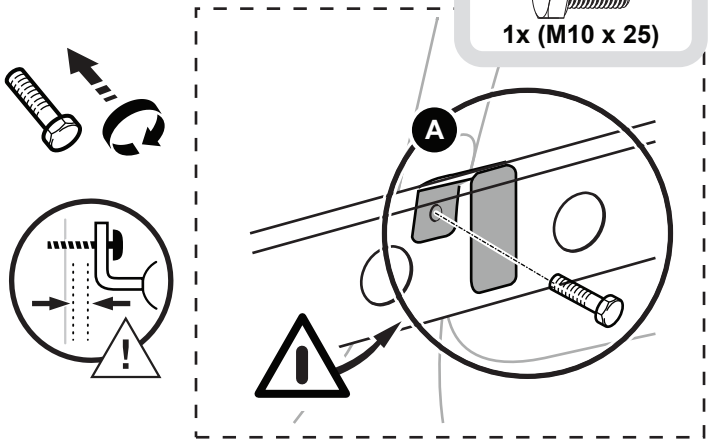

4

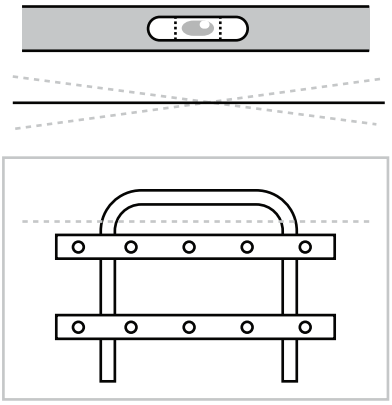

5

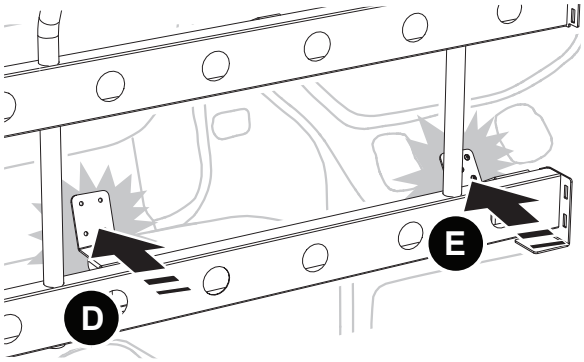

6

4,5 Nm
20x (M6x18 FDS)

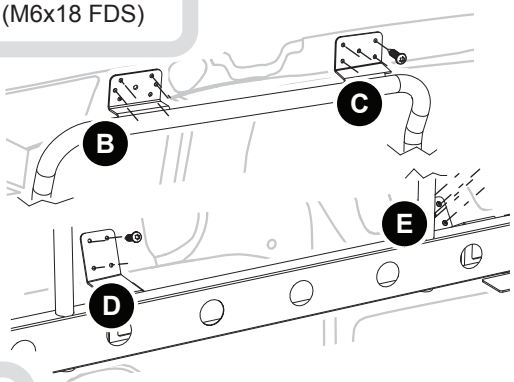

7

11 Nm

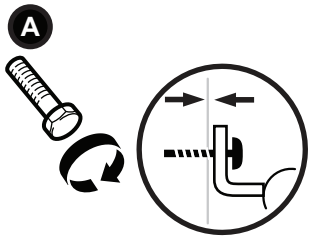

8

8x (M6 x 16)

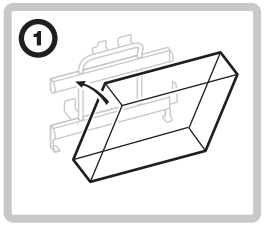

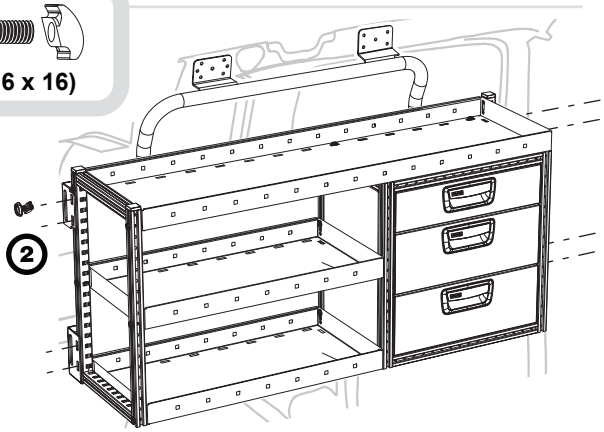

Berlingo | Partner

MODUL-SYSTEM 3126_01

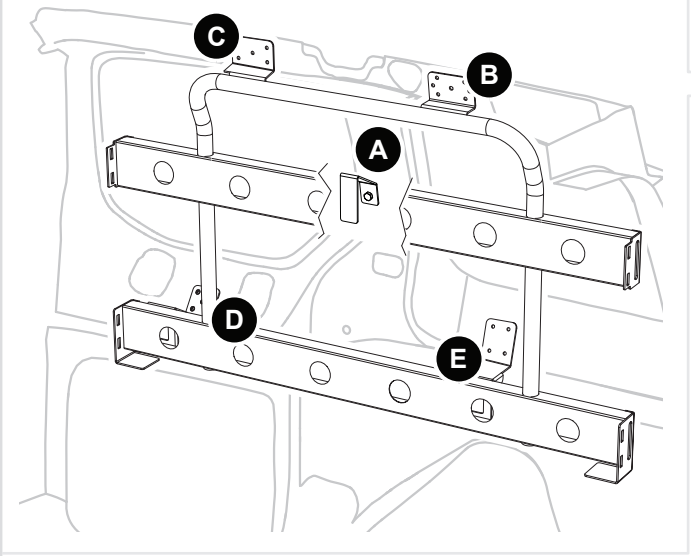

1

VHB Cleaner

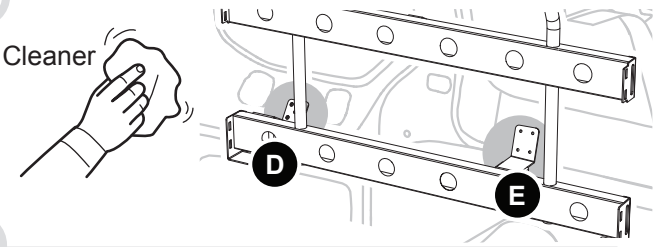

2

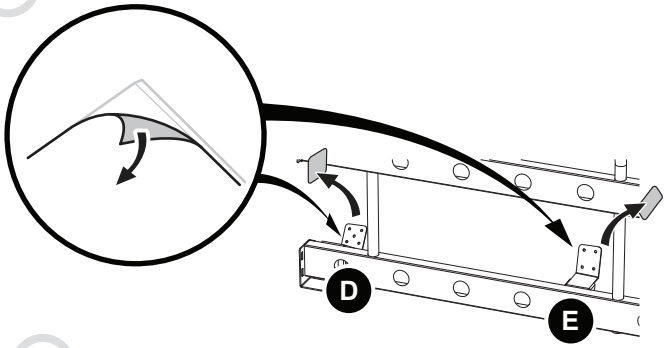

3

1x (M10 x 25)

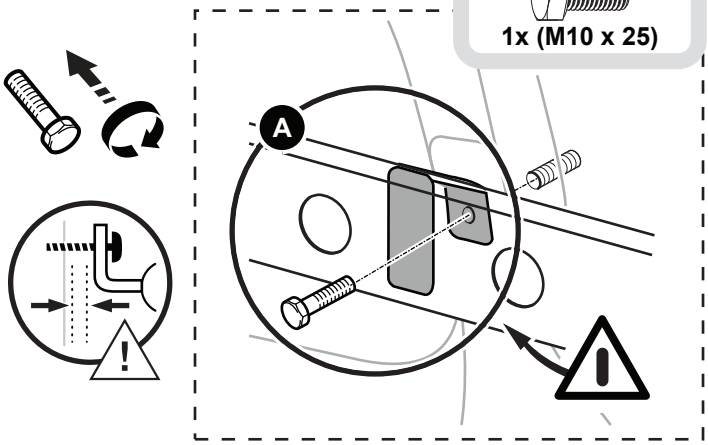

4

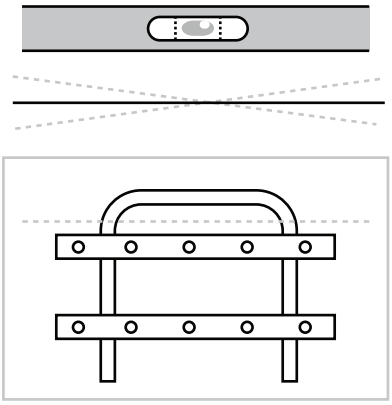

5

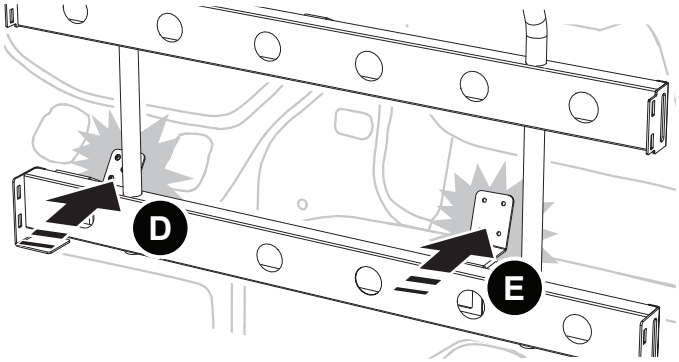

6

4,5 Nm

20x (M6x18 FDS)

2000-4500 rpm

Torx T30

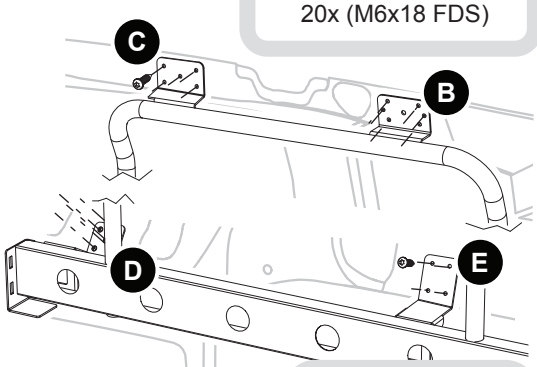

7

11 Nm

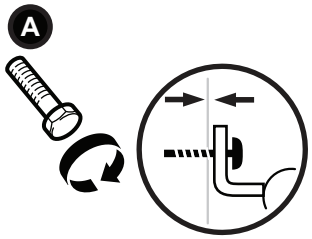

8

8x (M6 x 16)

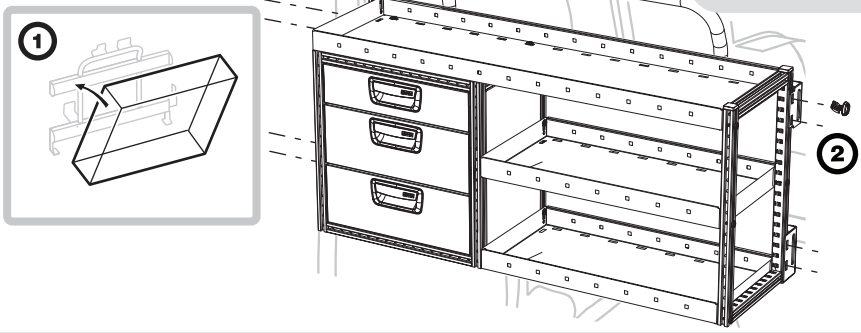

Berlingo | Partner

MODUL-SYSTEM **3133_01**

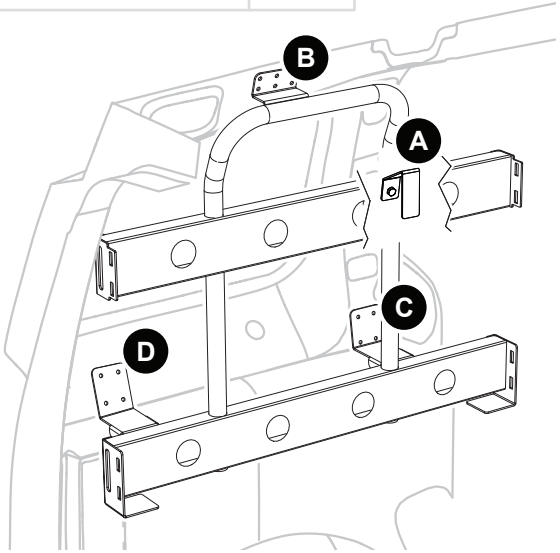

1

VHB Cleaner

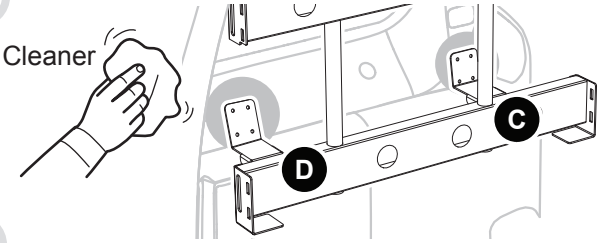

2

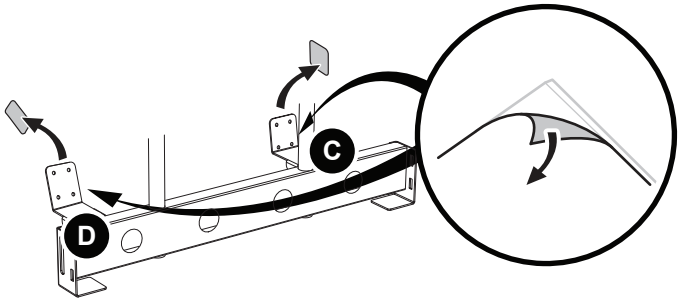

3

1x (M10 x 25)

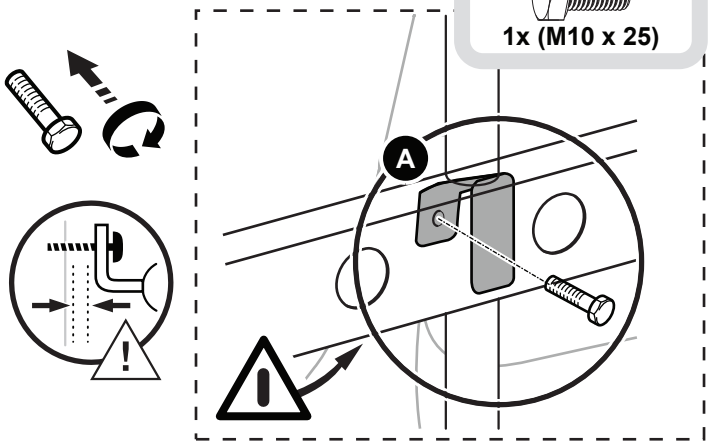

4

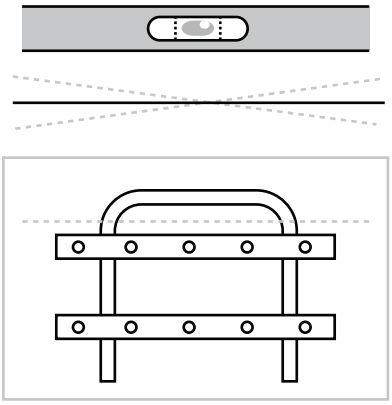

5

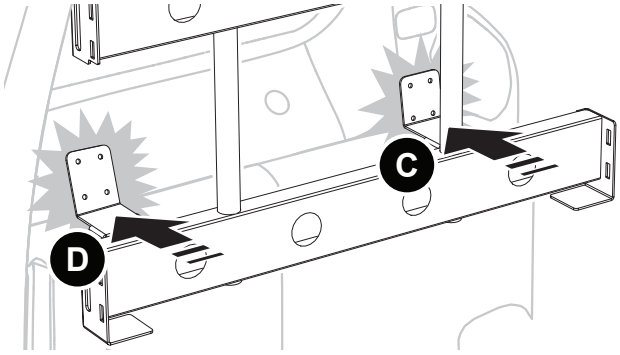

6

4,5 Nm

14x (M6x18 FDS)

2000-4500 rpm

Torx T30

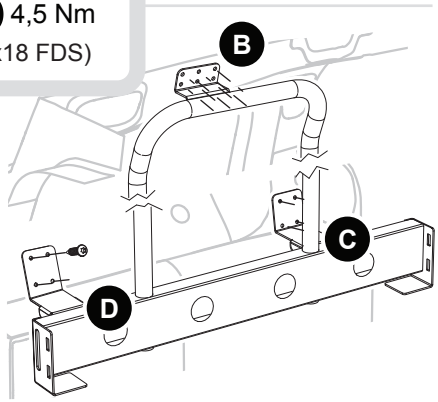

7

11 Nm

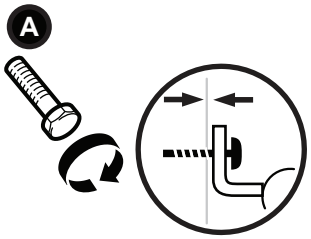

8

8x (M6 x 16)

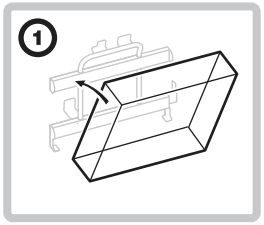

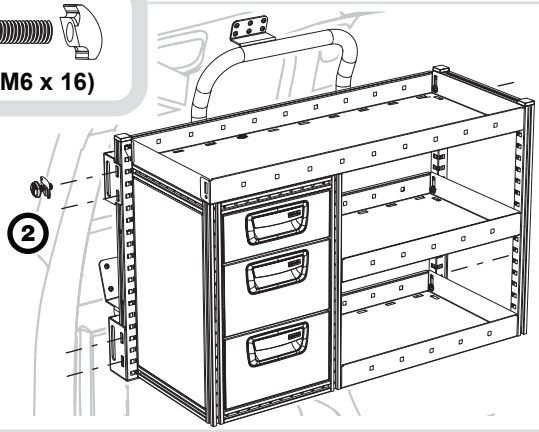

Berlingo | Partner

MODUL-SYSTEM 3127_01

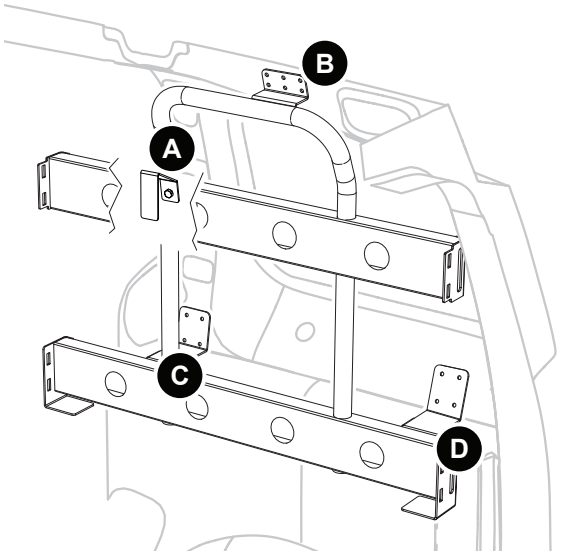

1

VHB Cleaner

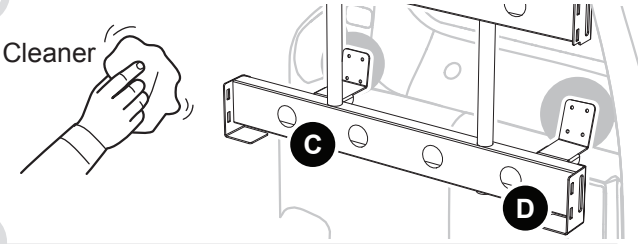

2

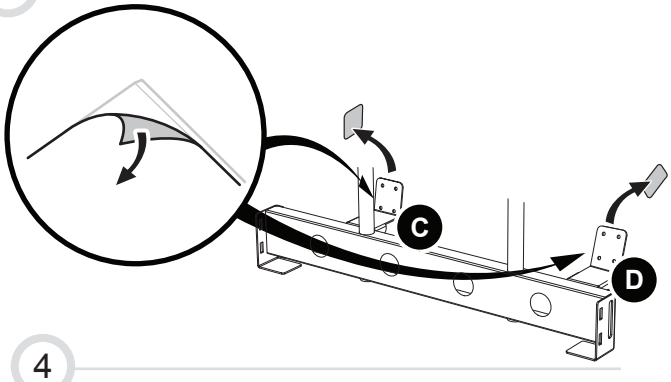

3

1x (M10 x 25)

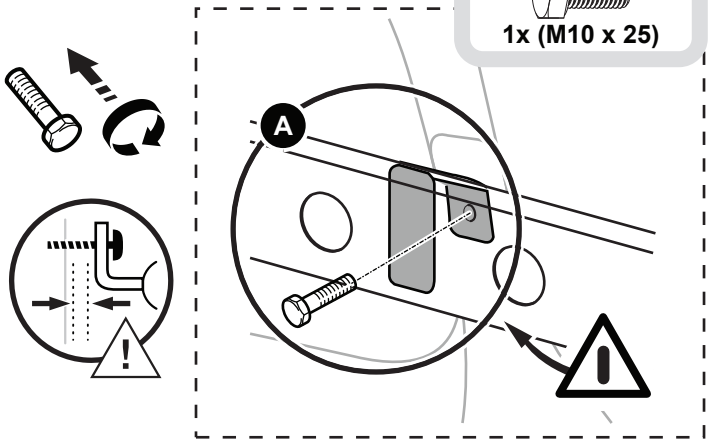

4

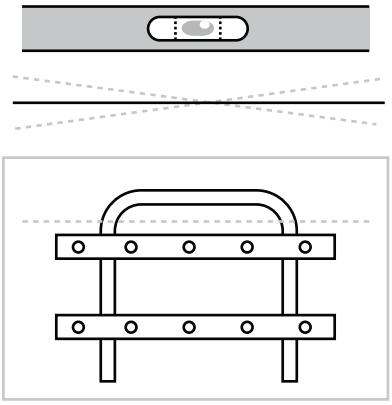

5

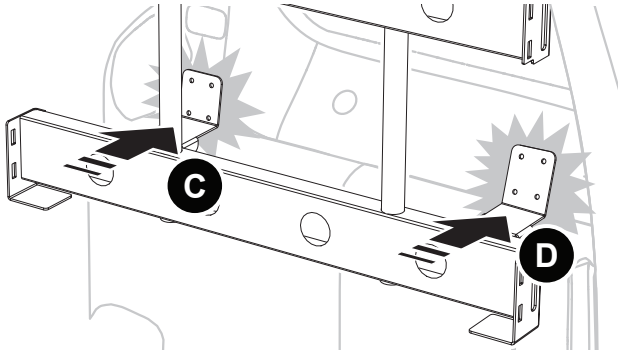

6

4,5 Nm

14x (M6x18 FDS)

2000-4500 rpm

Torx T30

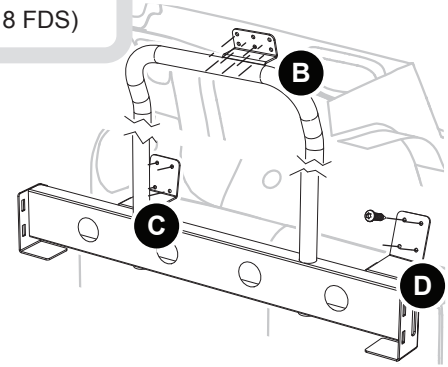

7

11 Nm

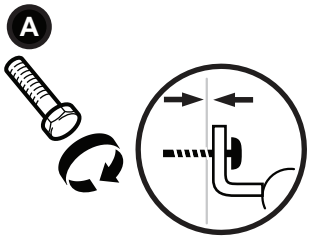

8

8x (M6 x 16)

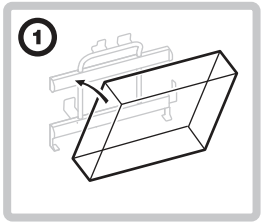

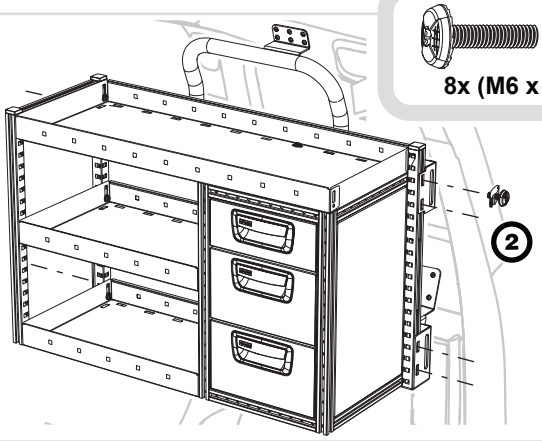

VW Caddy

MODUL-SYSTEM 3141_02

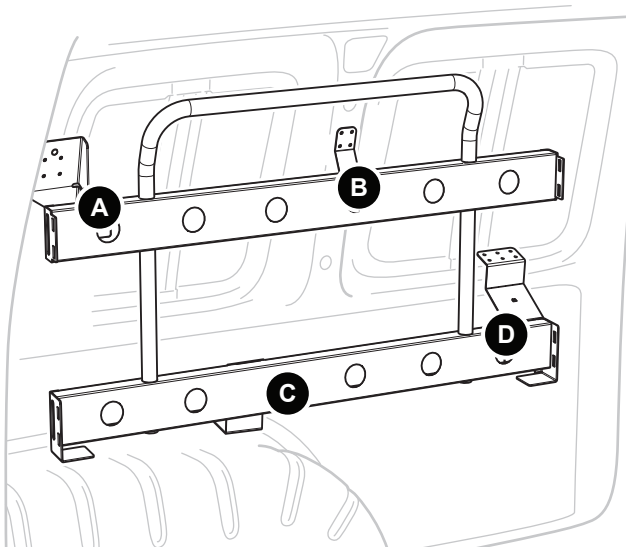

1

VHB Cleaner

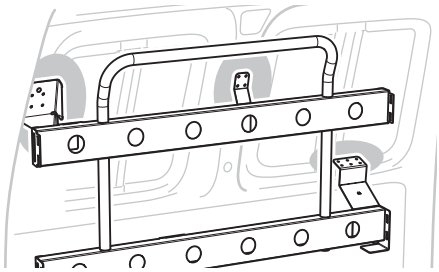

2

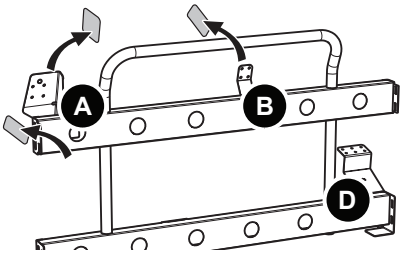

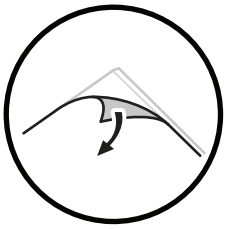

3

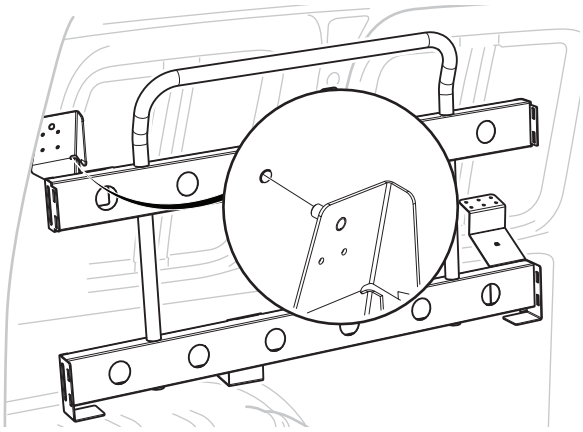

4

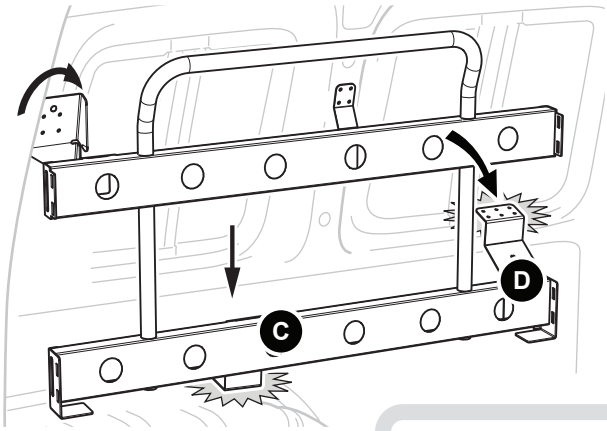

5

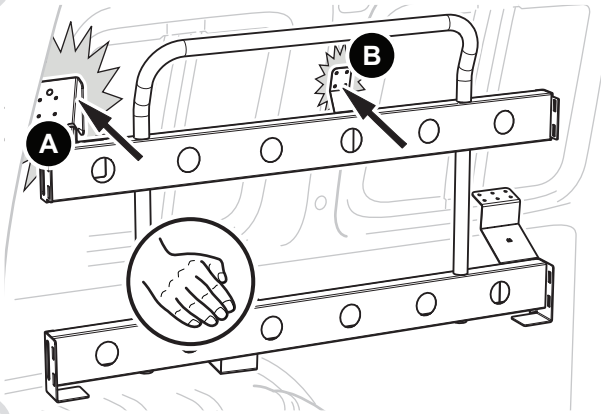

6

4,5 Nm
14x (M6x18 FDS)

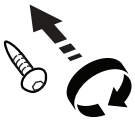

2000-4500 rpm
Torx T30

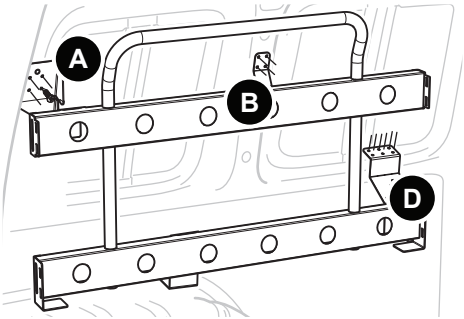

7

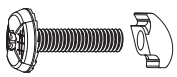

8x (M6 x 16)

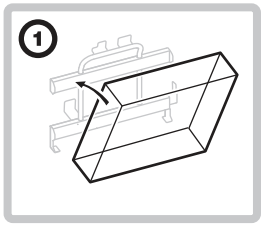

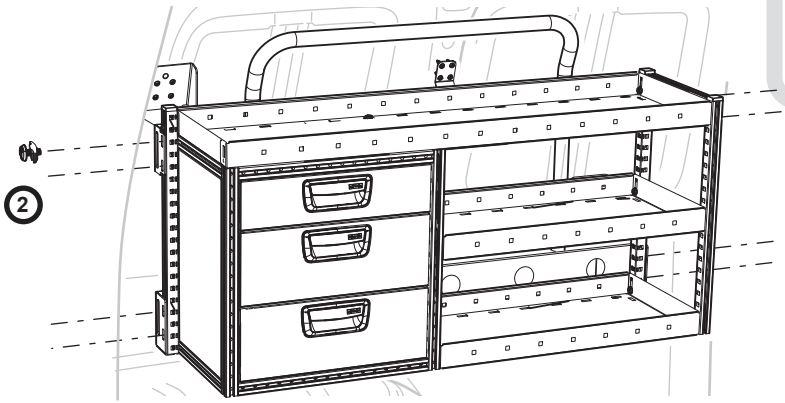

VW Caddy

MODUL-SYSTEM 3134_02

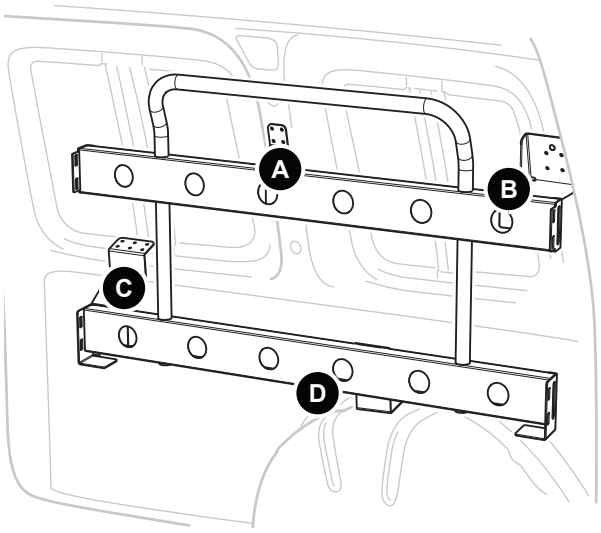

1

VHB Cleaner

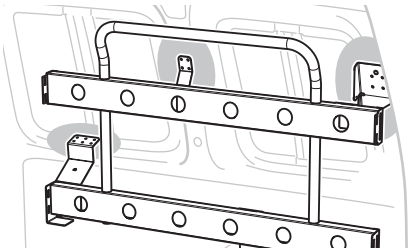

2

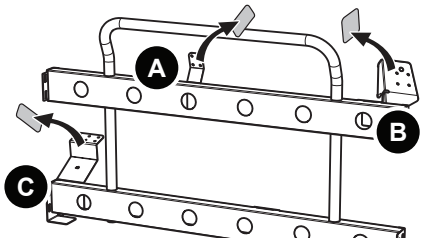

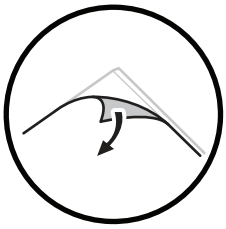

3

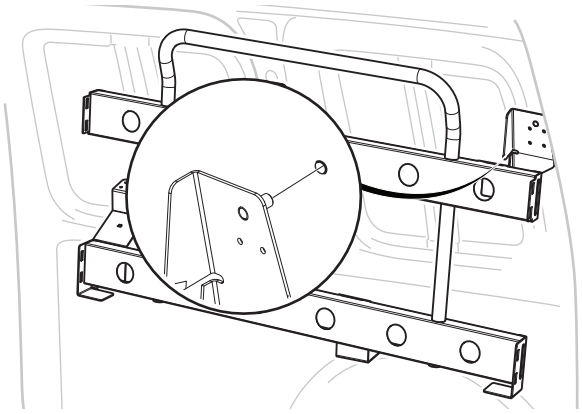

4

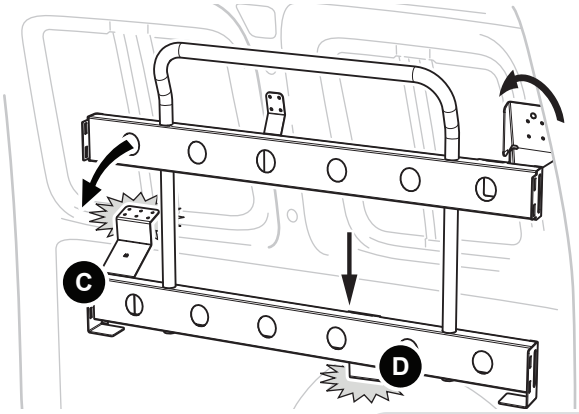

5

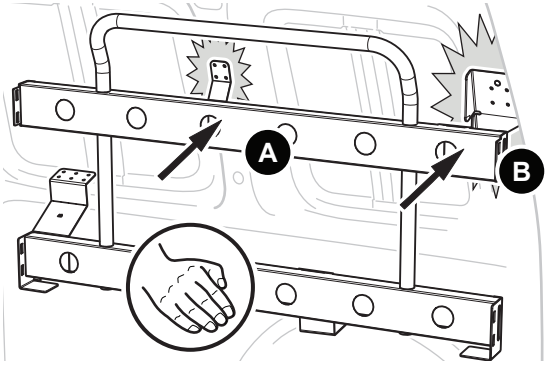

6

4,5 Nm
14x (M6x18 FDS)

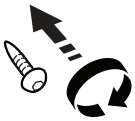

2000-4500 rpm
Torx T30

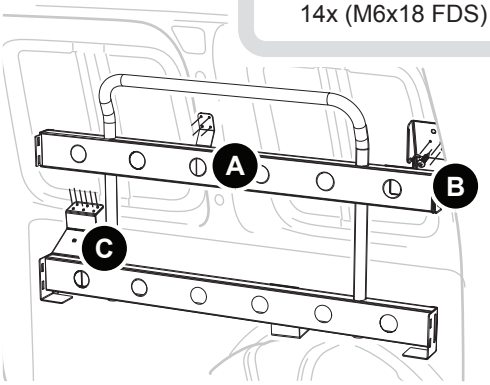

7

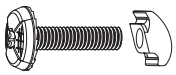

8x (M6 x 16)

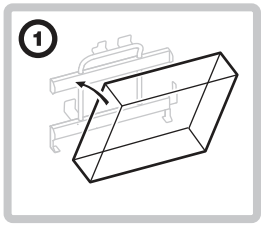

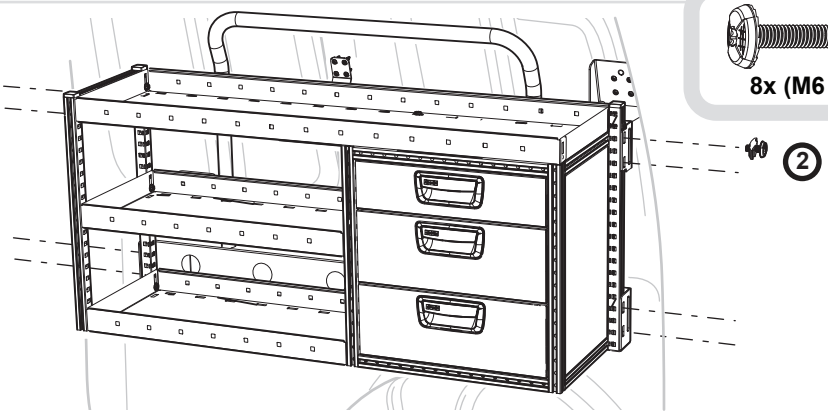

VW Caddy

MODUL-SYSTEM 3093_02

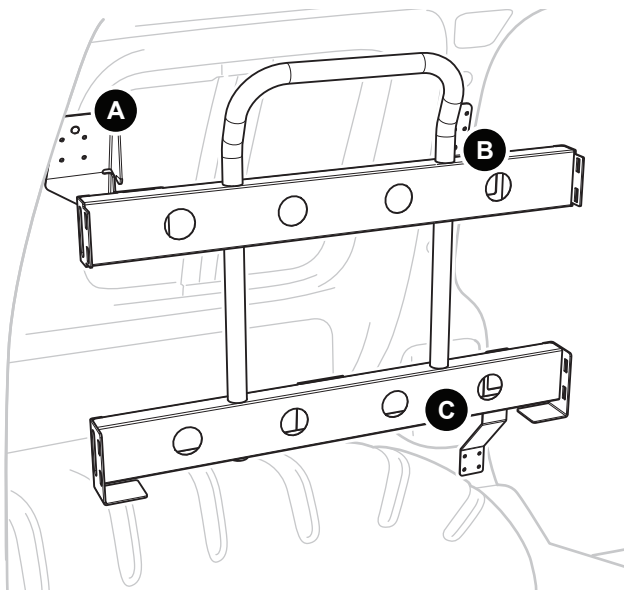

1

VHB Cleaner

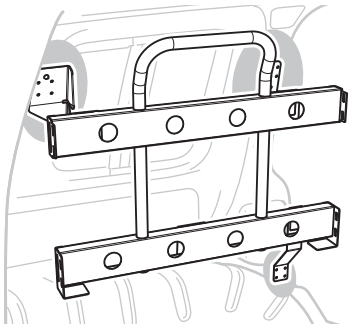

2

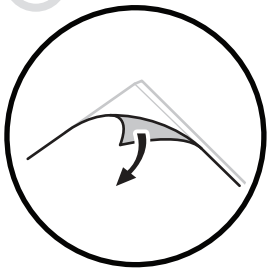

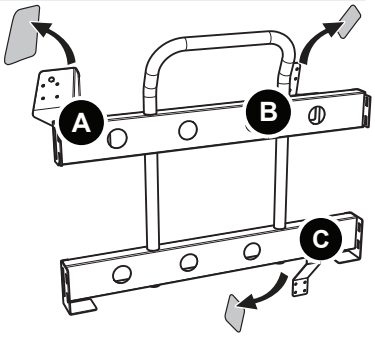

3

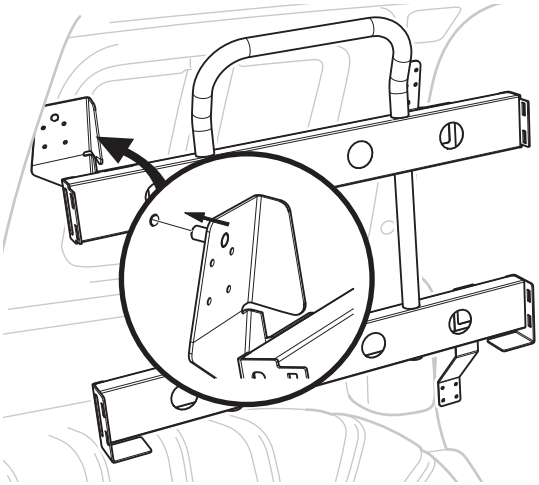

4

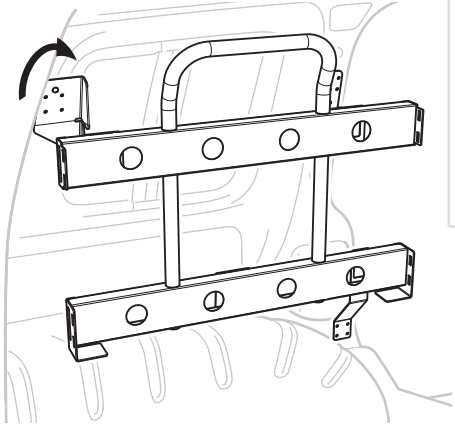

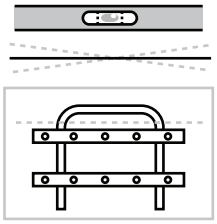

5

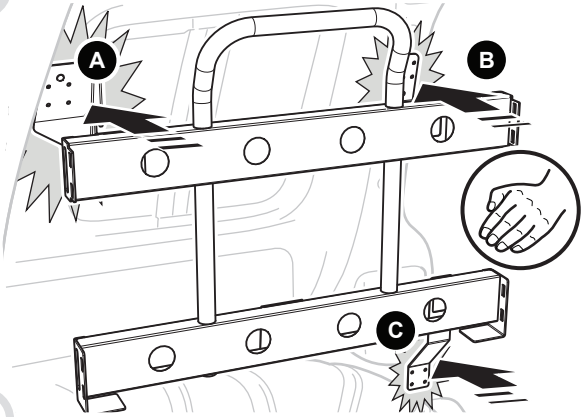

6

4,5 Nm
12x (M6x18 FDS)

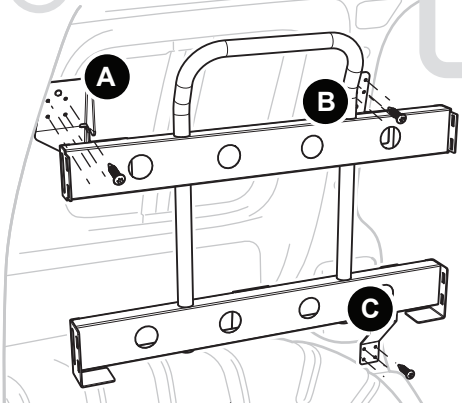

2000-4500 rpm
Torx T30

7

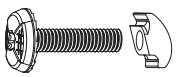

8x (M6 x 16)

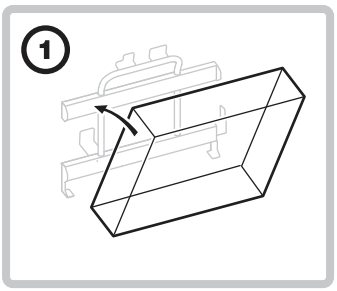

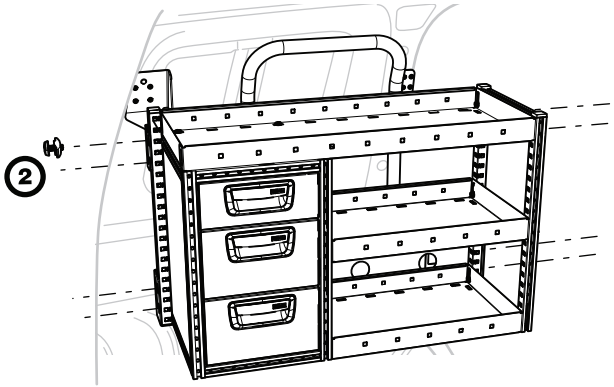

VW Caddy

MODUL-SYSTEM 3142_02

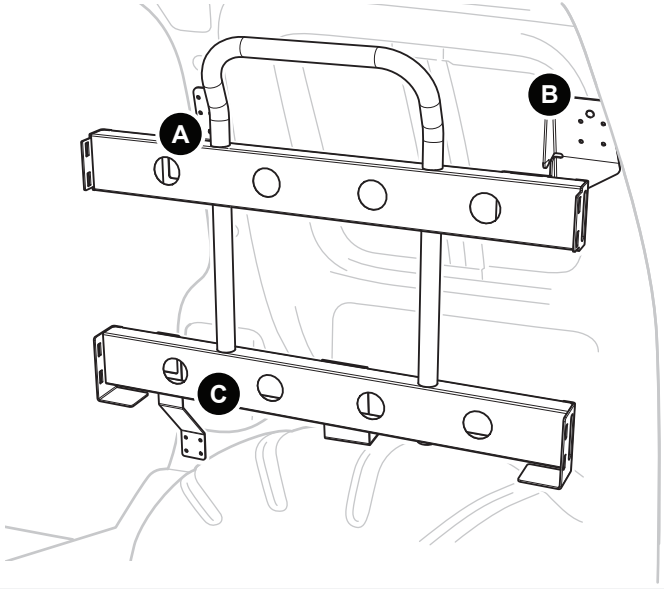

1

VHB Cleaner

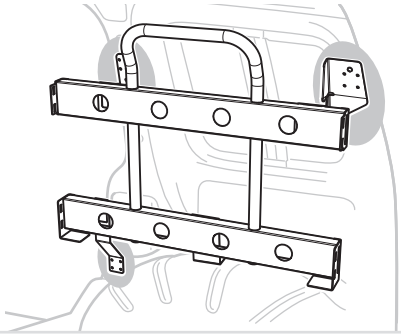

2

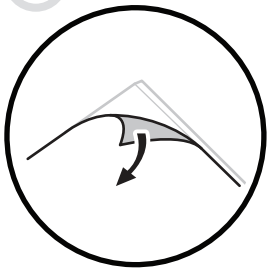

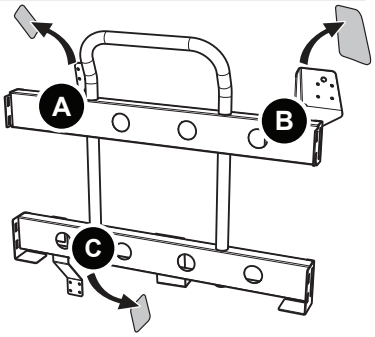

3

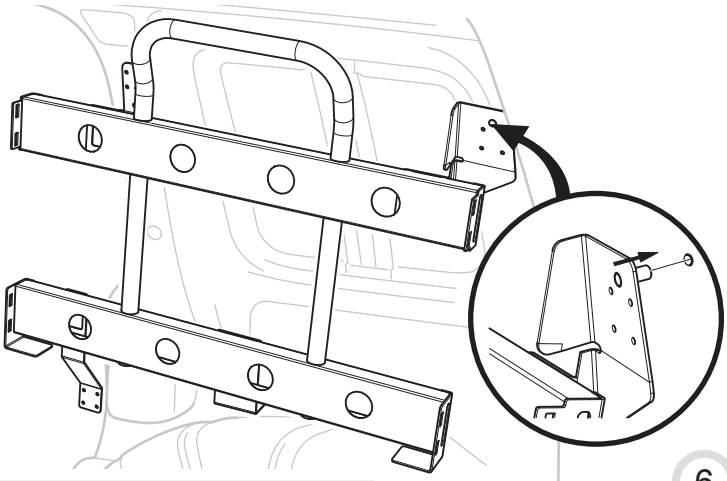

4

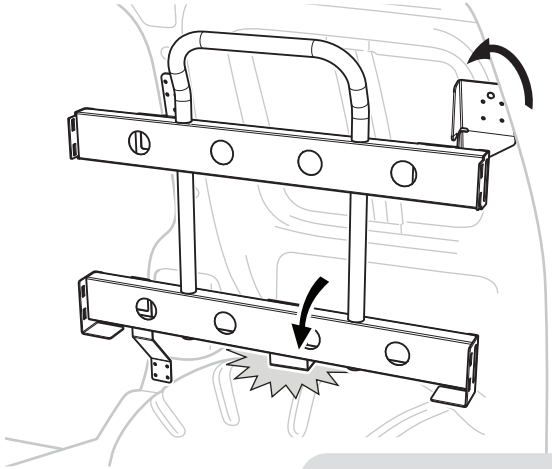

5

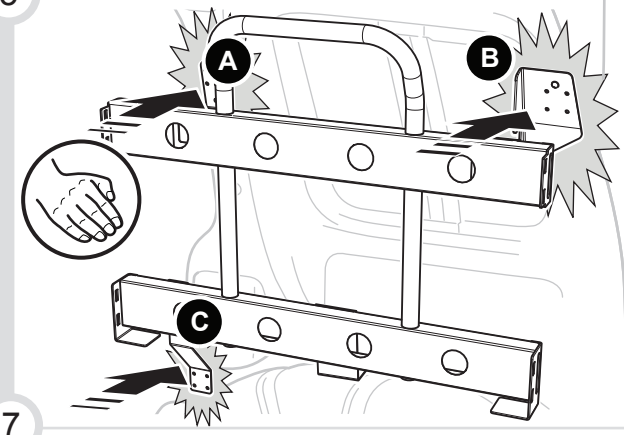

6

4,5 Nm
12x (M6x18 FDS)

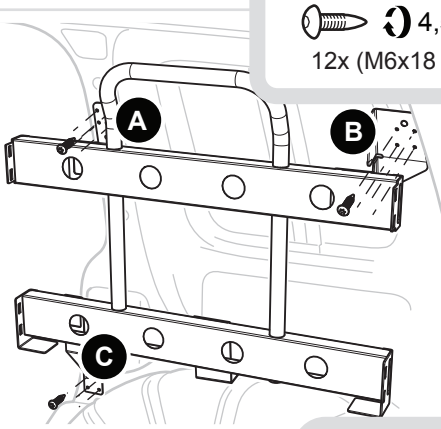

7

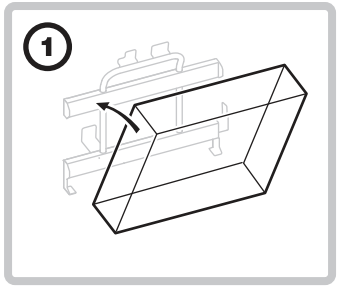

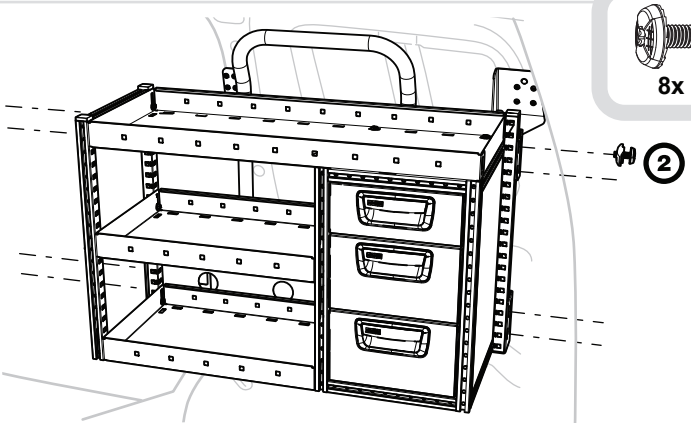

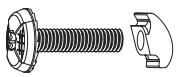

8x (M6 x 16)

MODUL-SYSTEM 3046_02

4x (M6 x 16)

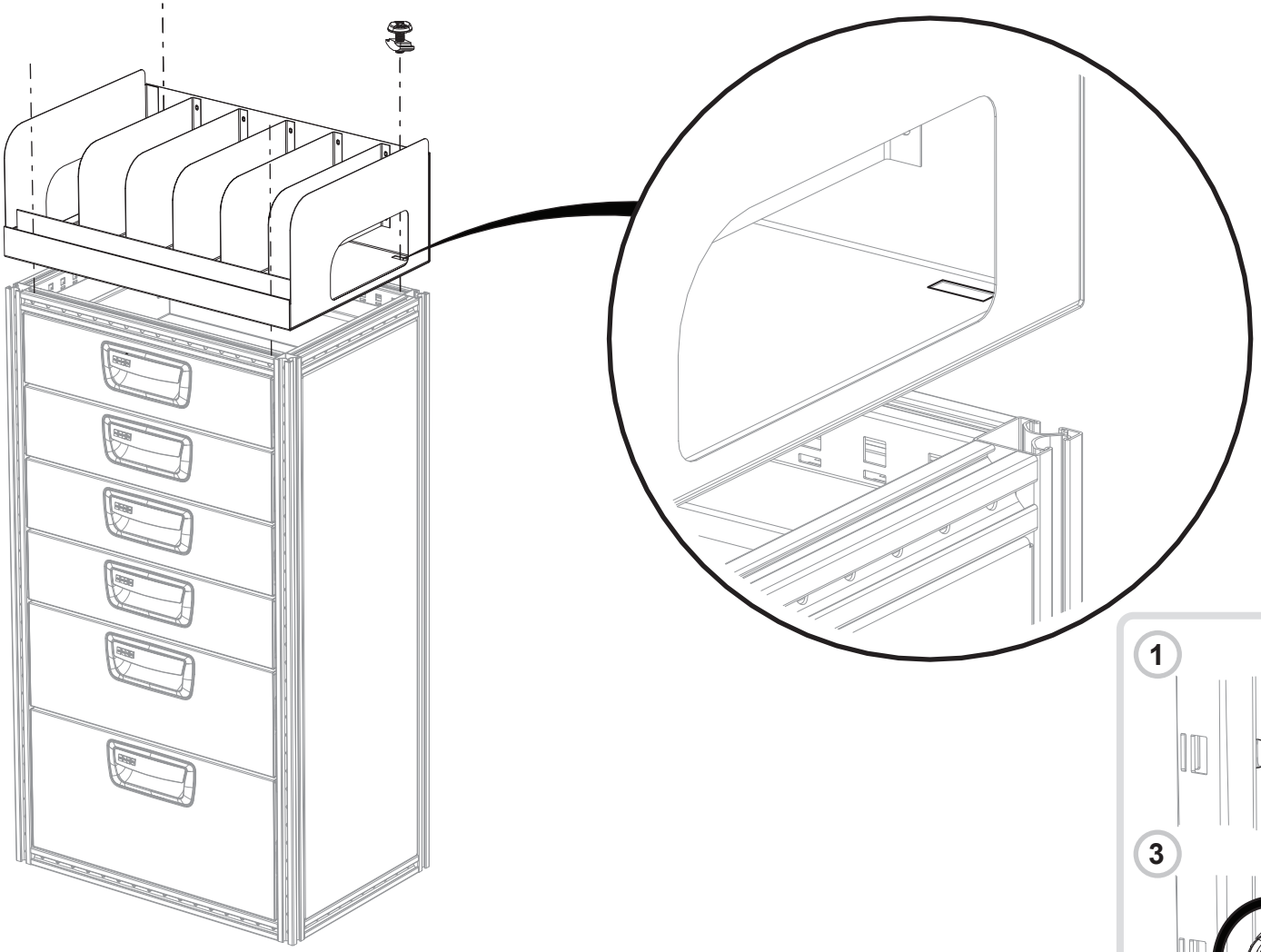

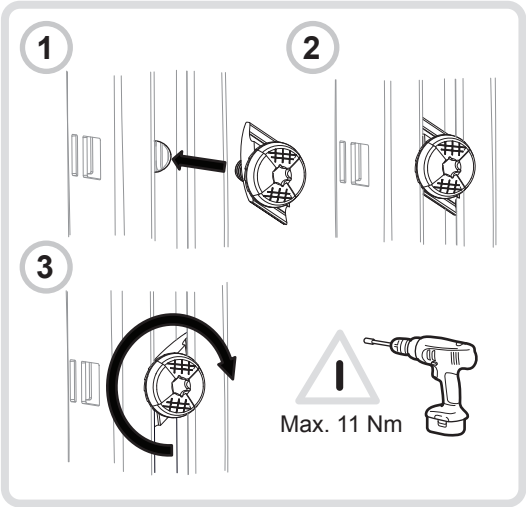

MODUL-SYSTEM 3071_01

1

M6 x 12

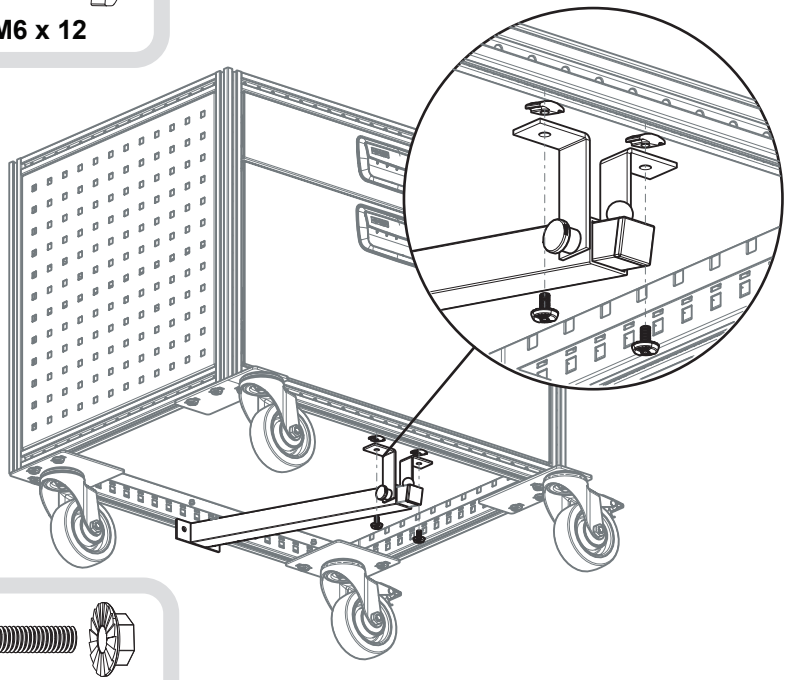

2

M6 x 40

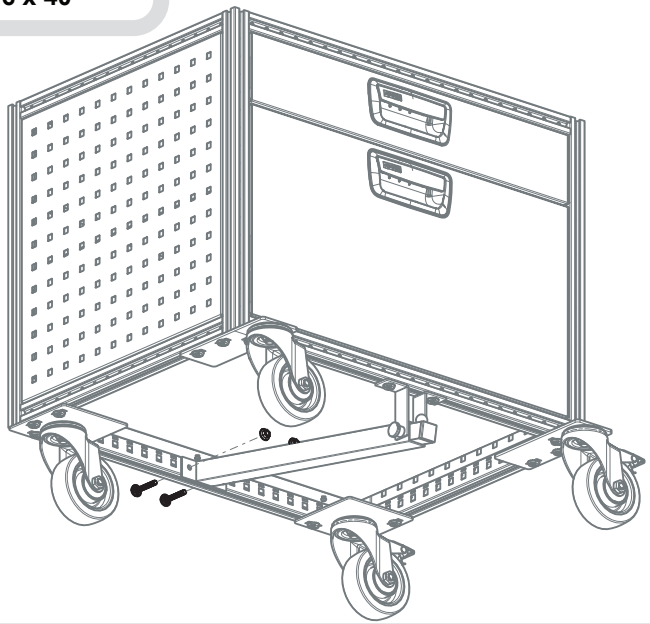

3

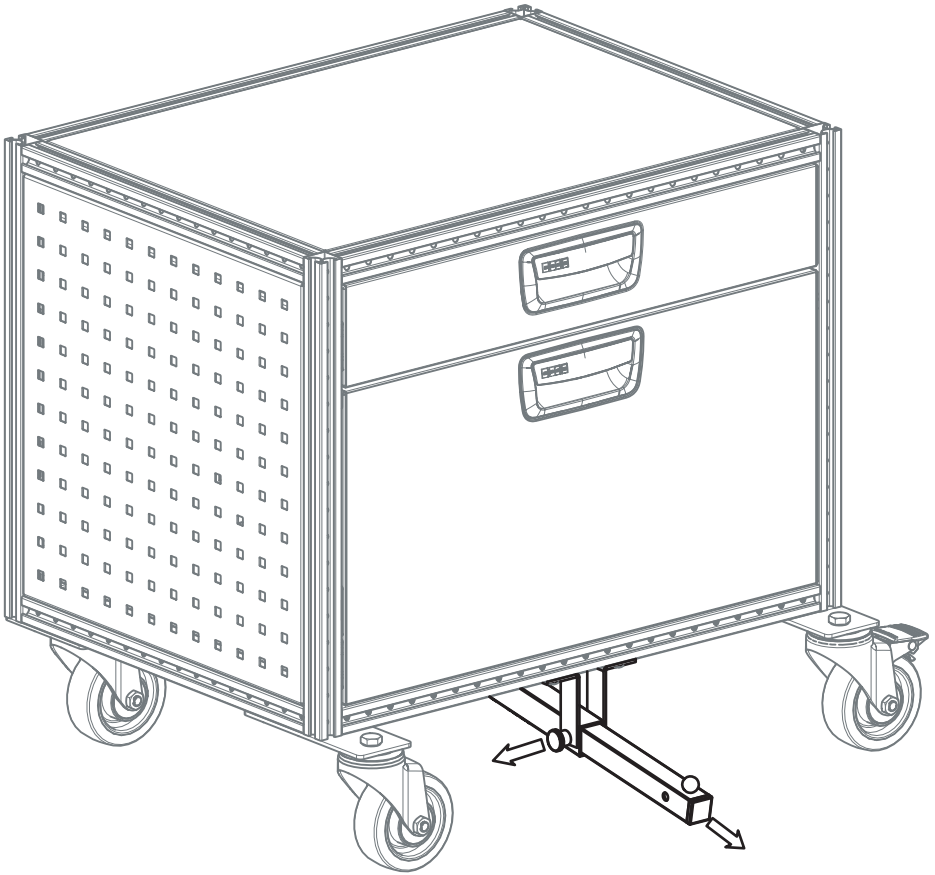

MODUL-SYSTEM 3031_01

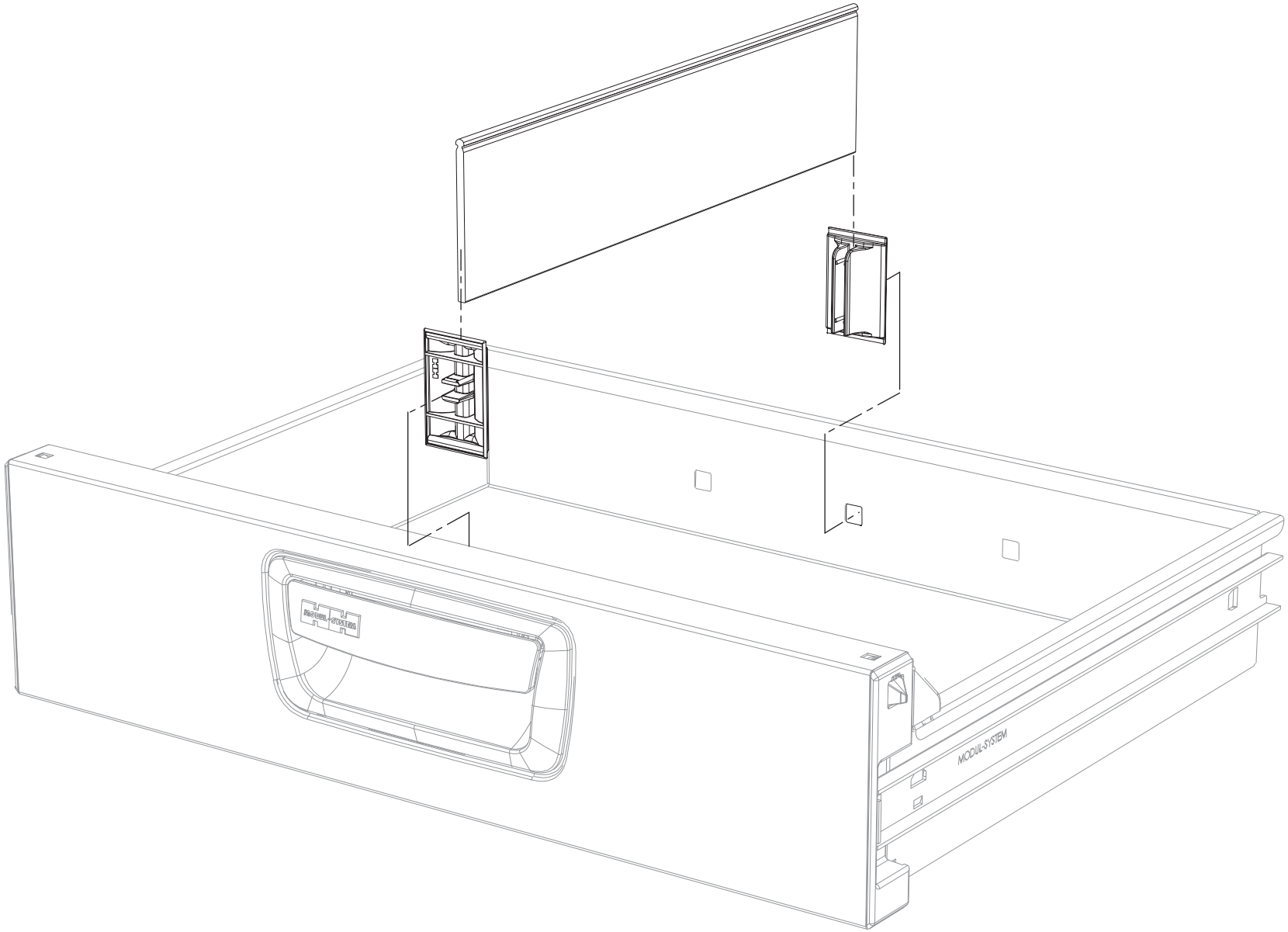

MODUL-SYSTEM 3109_01

1

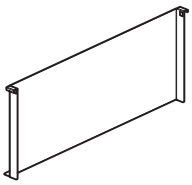

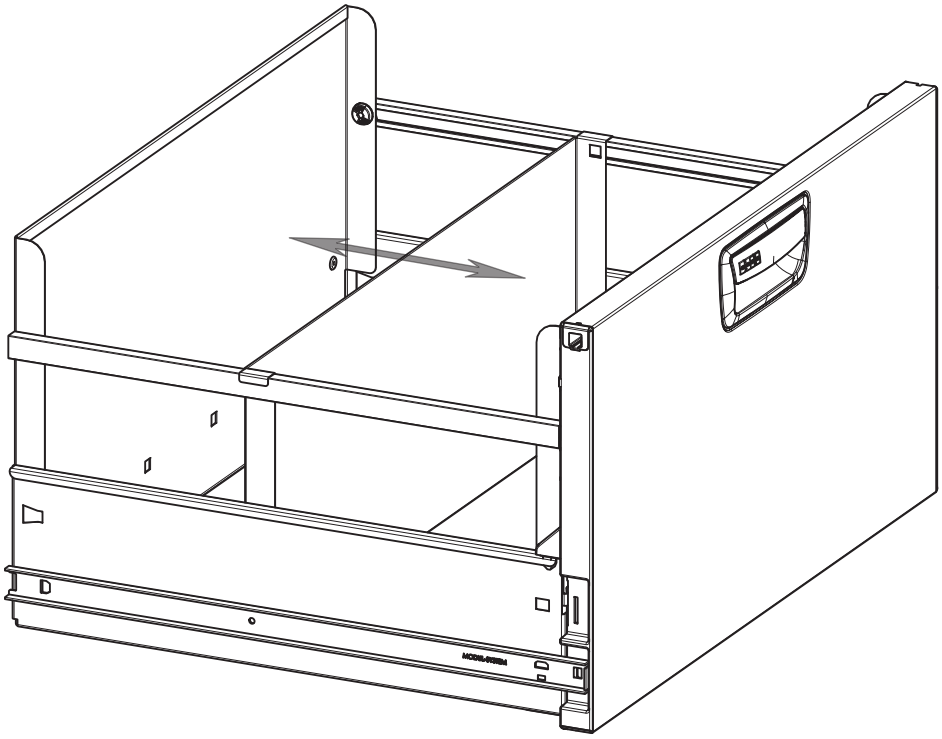

2

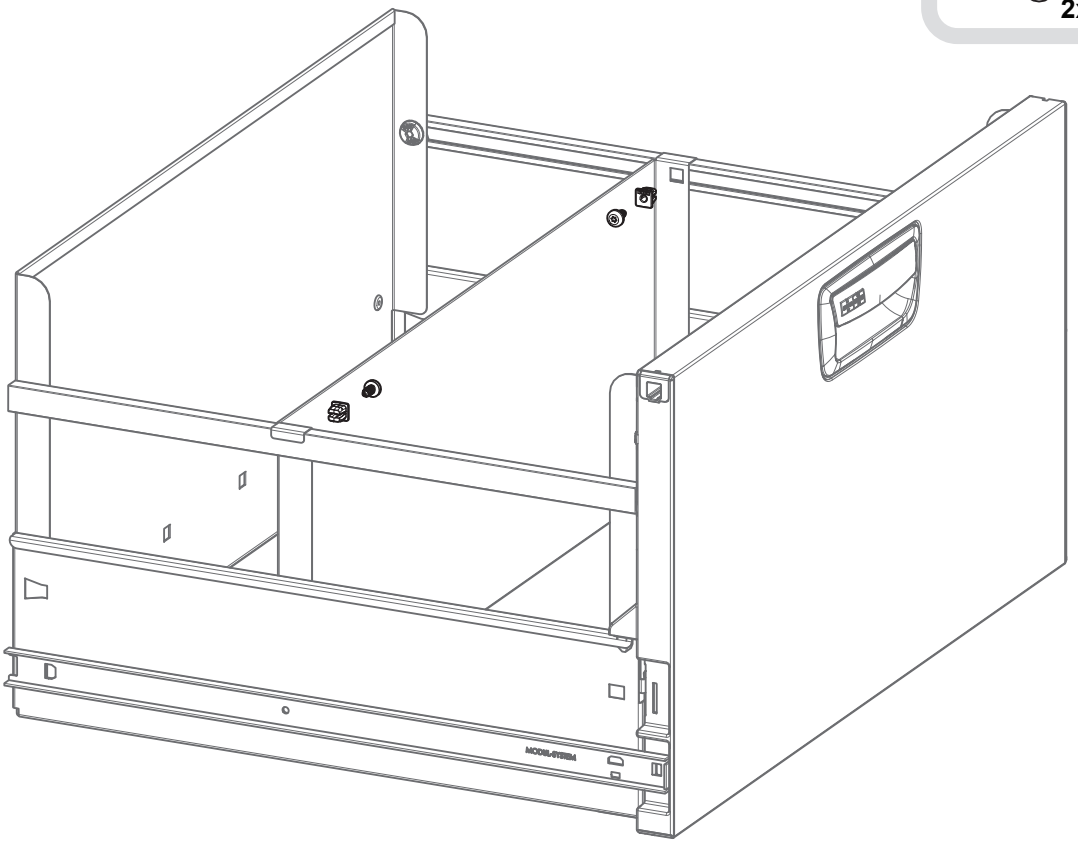

MODUL-SYSTEM 3123_05

1

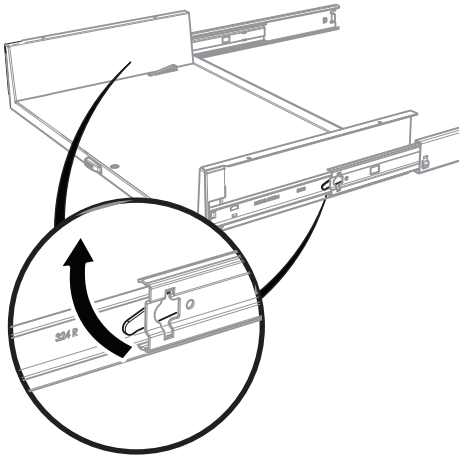

2

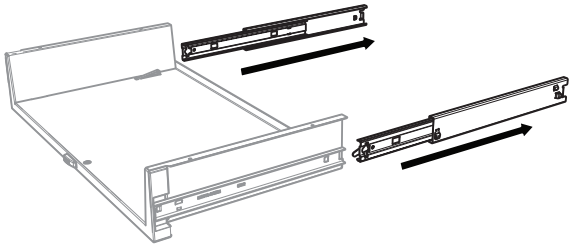

3

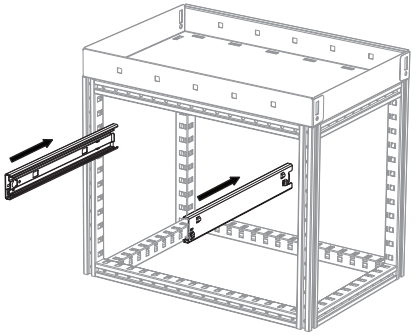

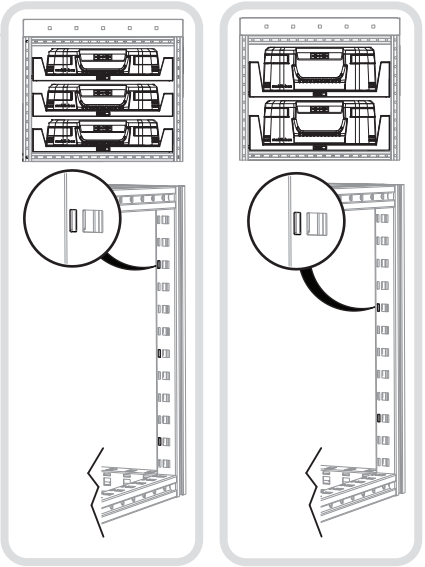

4

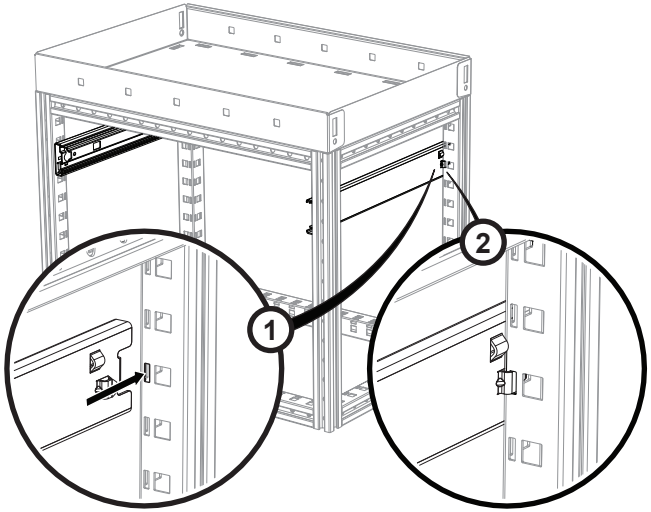

5

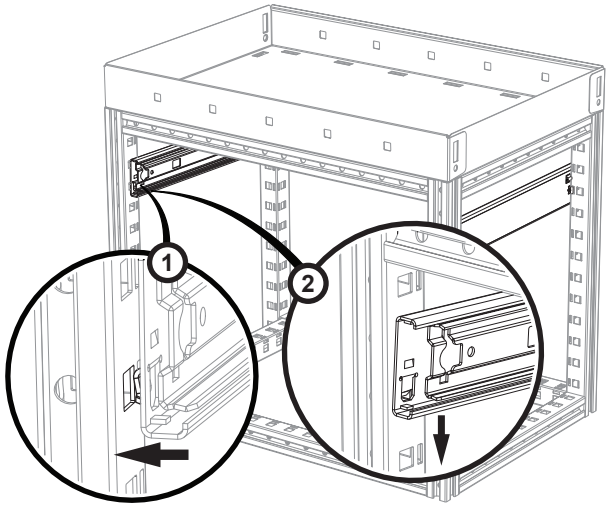

6

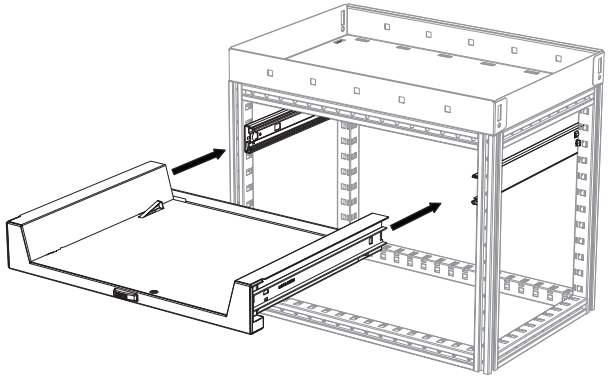

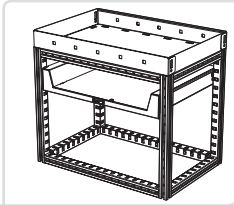

3025_04

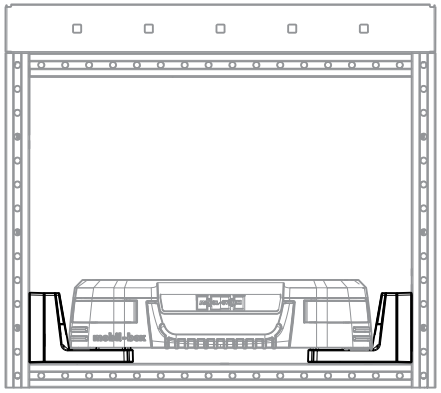

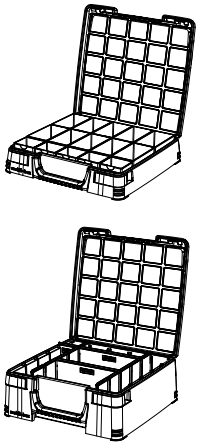

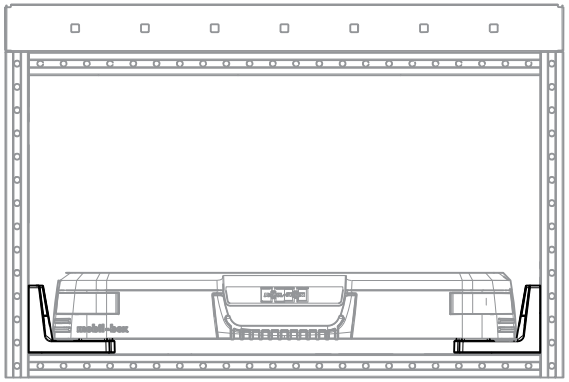

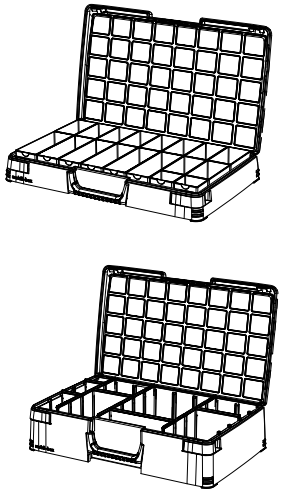

4 x

4 x

(4x) PT 5x40

4 x

(4x) PT 5x20

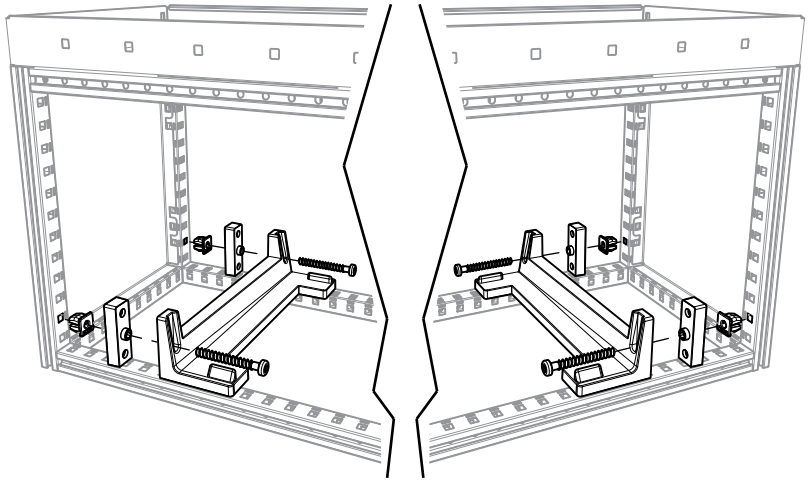

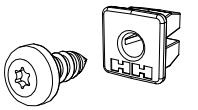

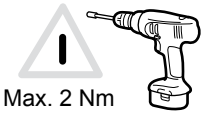

Max. 2 Nm

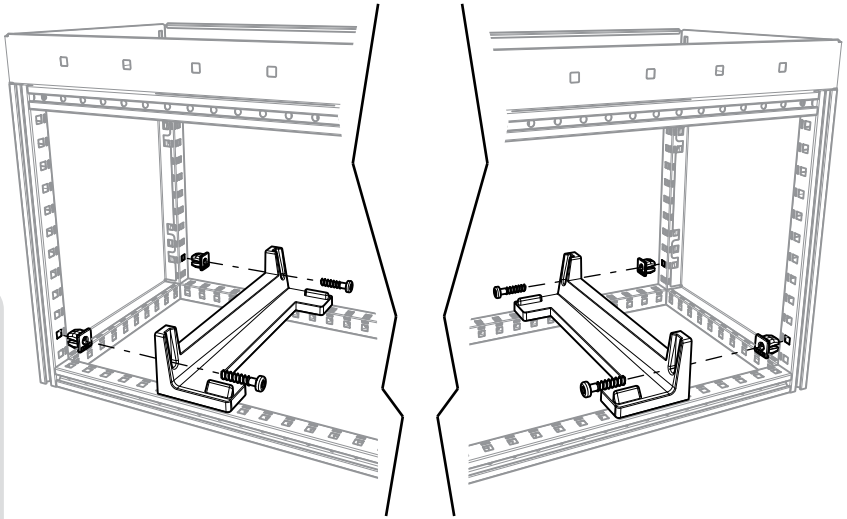

MODUL-SYSTEM 3069_01

1

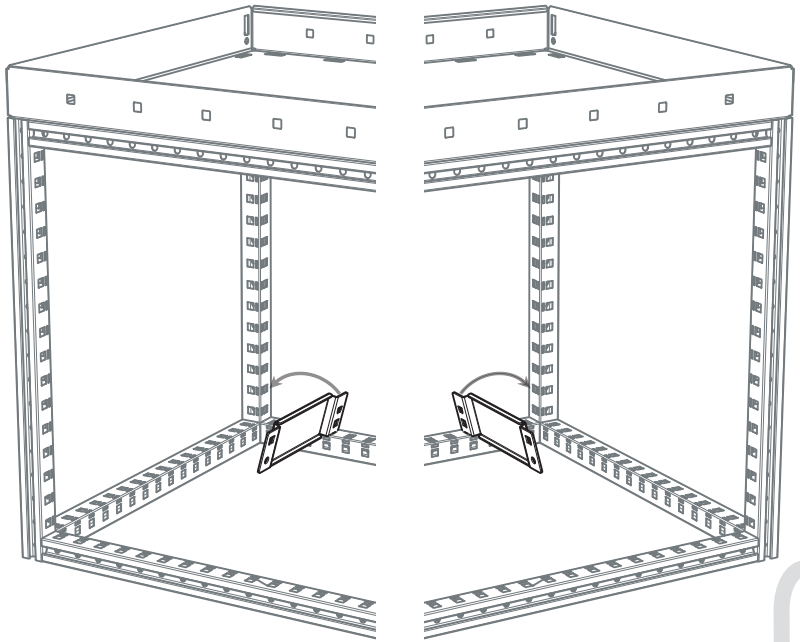

2

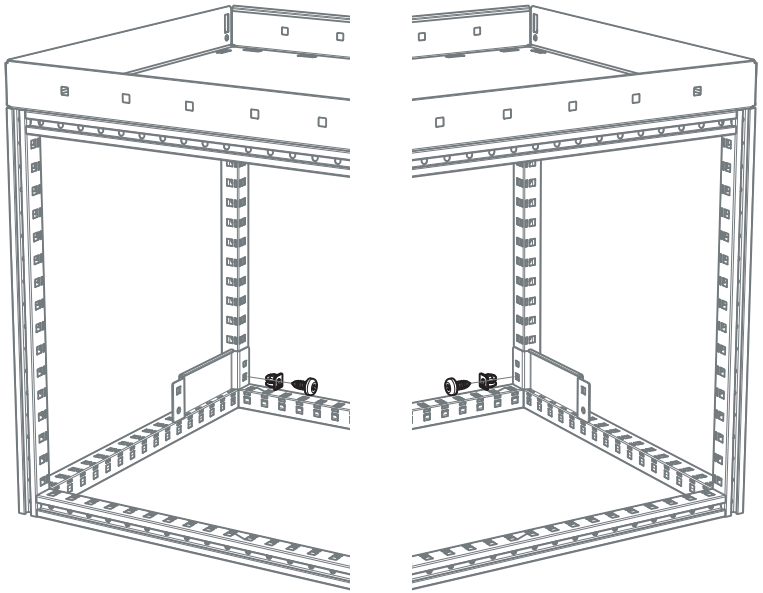

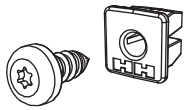

2x

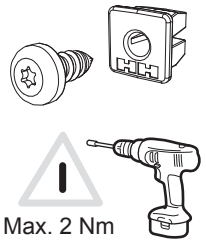

Max. 2 Nm

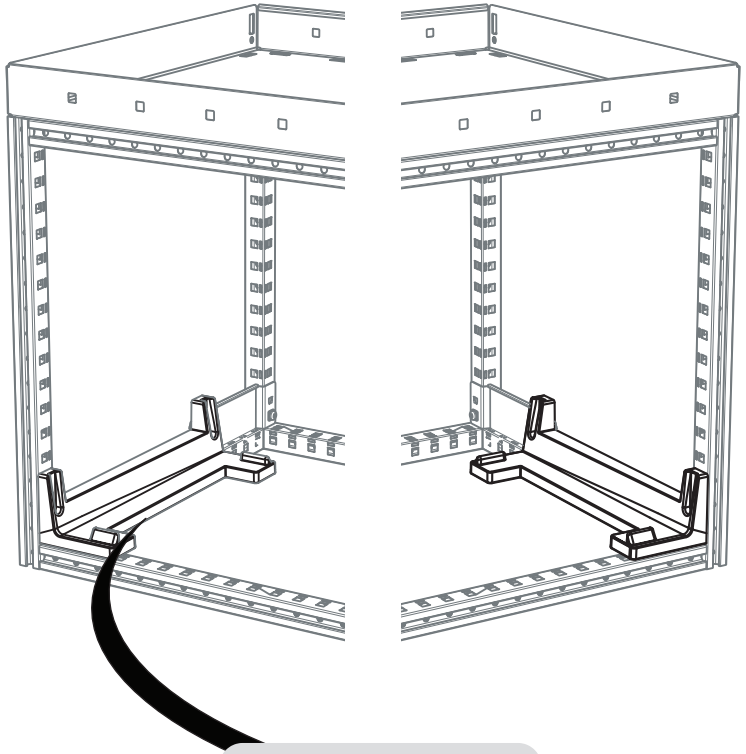

MODUL-SYSTEM 3025

MODUL-SYSTEM 3067_01

1

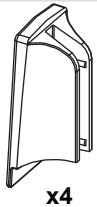

x4

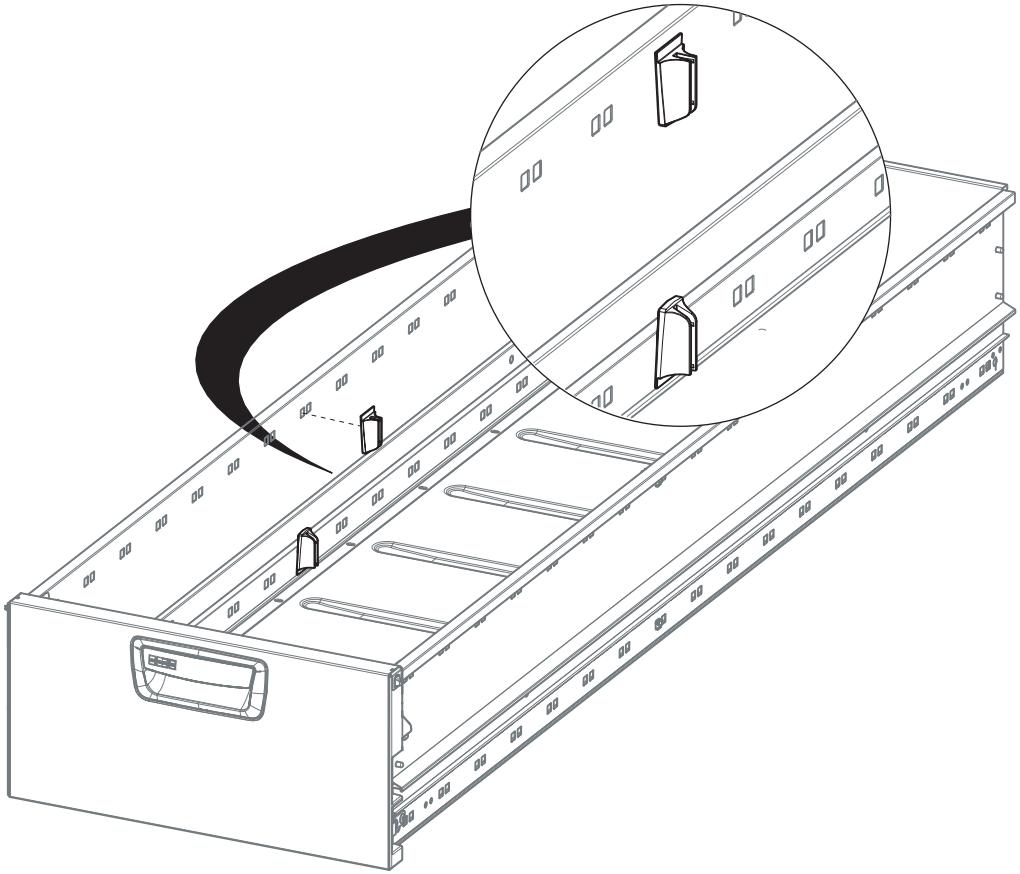

2

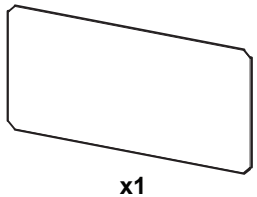

x1

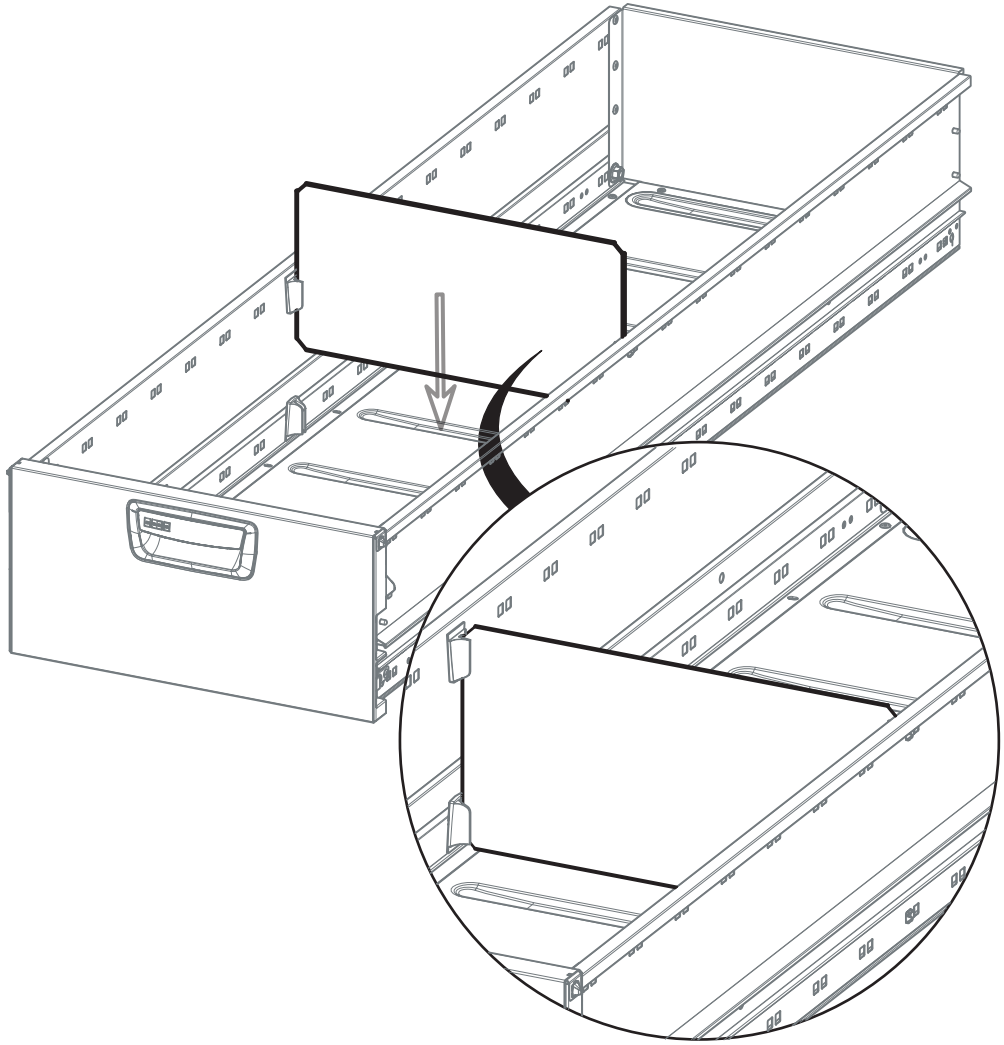

MODUL-SYSTEM 3044_01

1A

4x

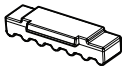

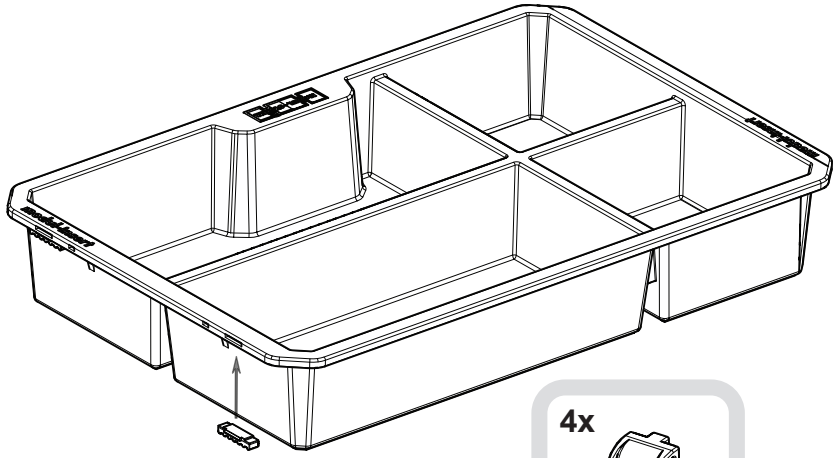

2

4x

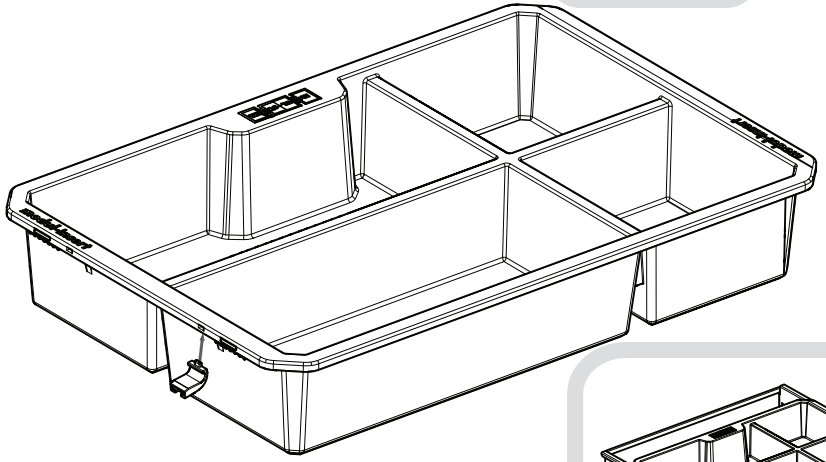

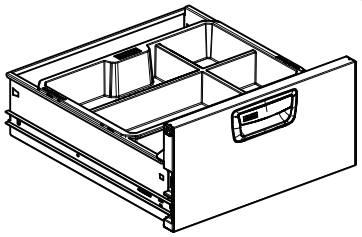

1B

4x

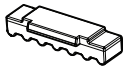

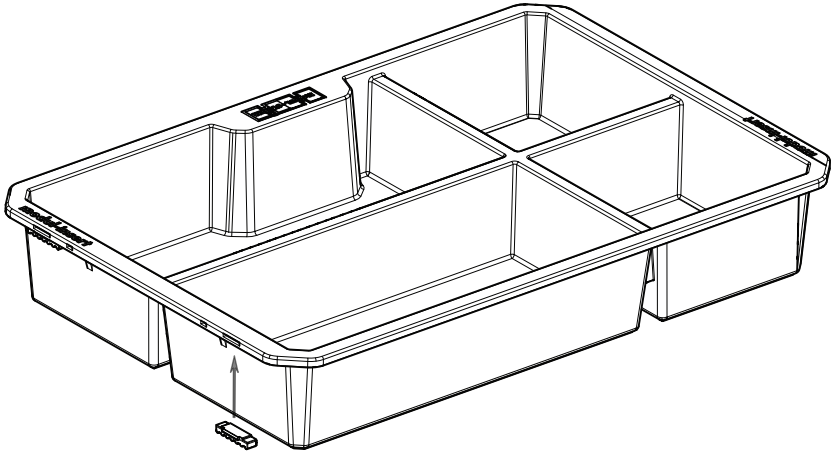

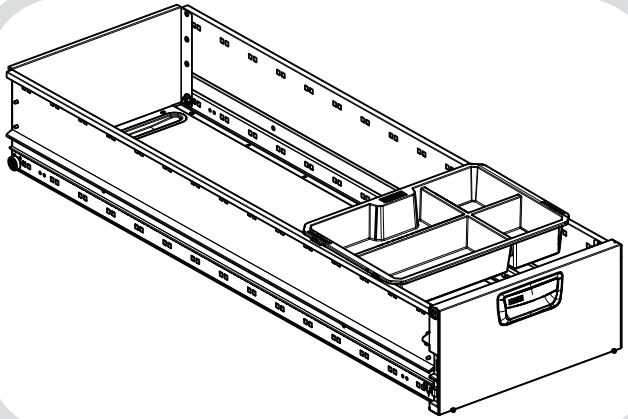

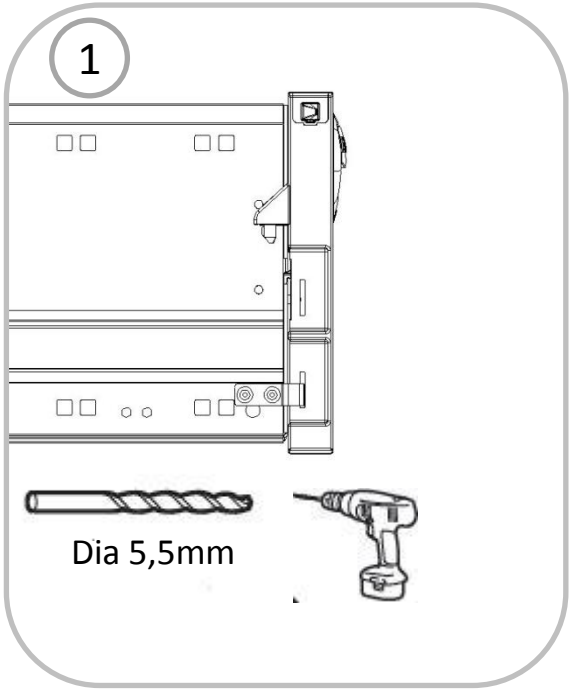
1
Dia 5,5mm

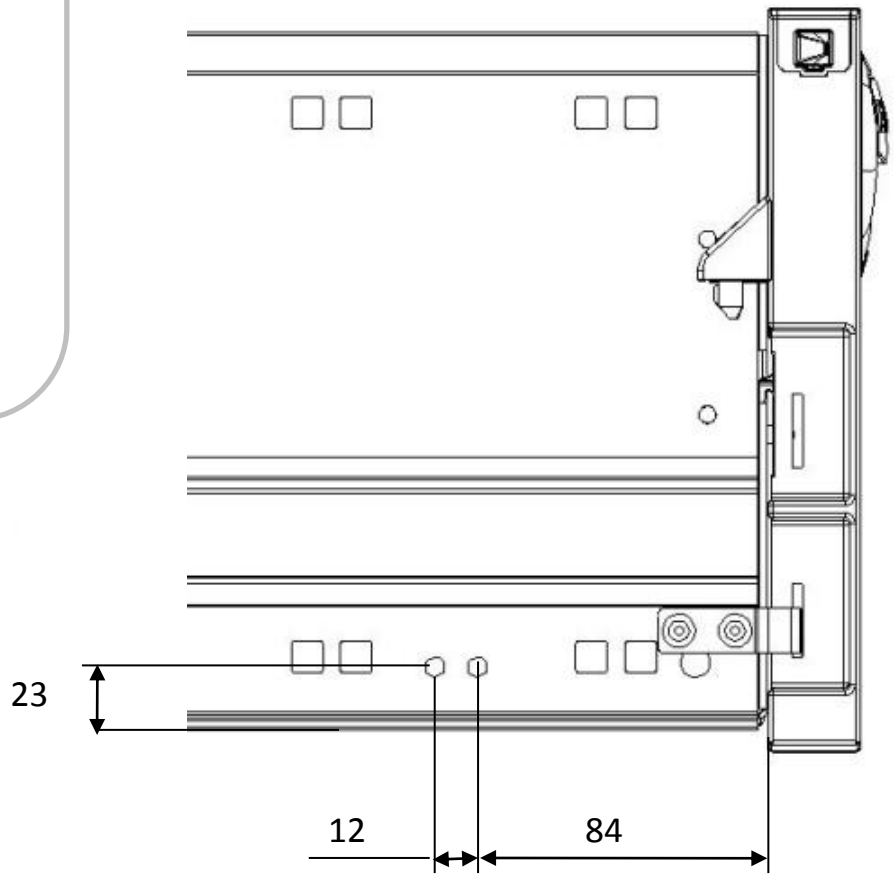
23
12
84

3037_1

2

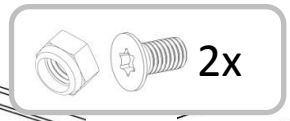

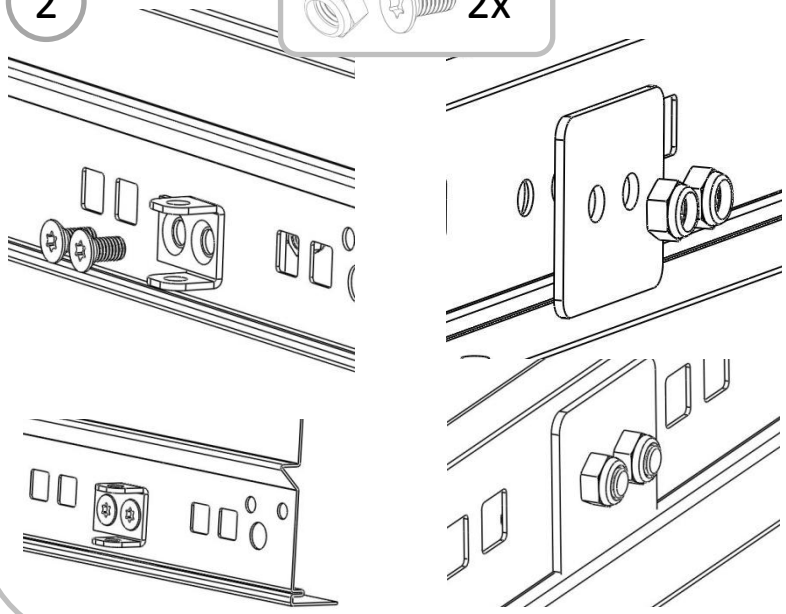

3a

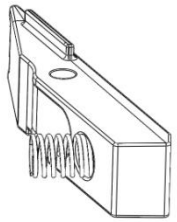

3b

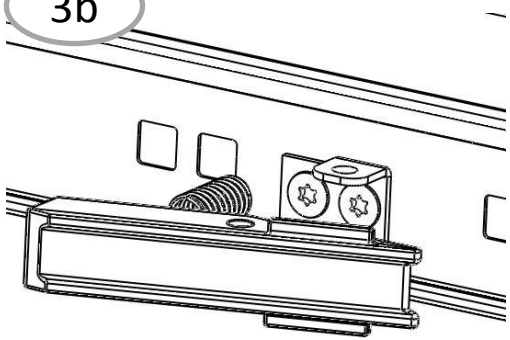

4

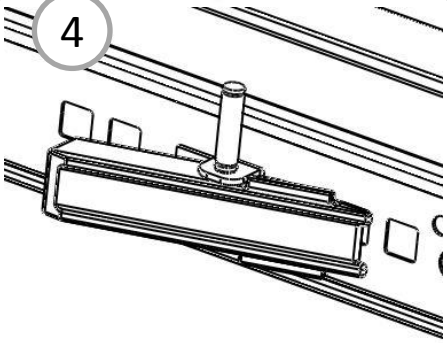

5

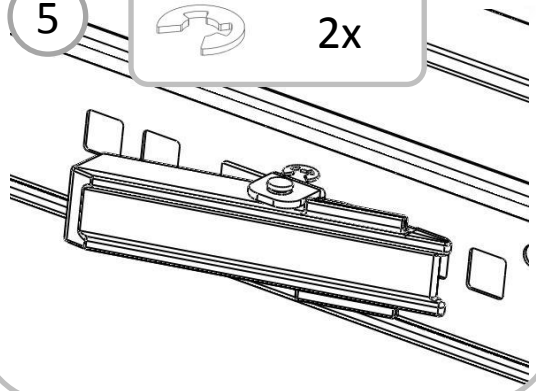

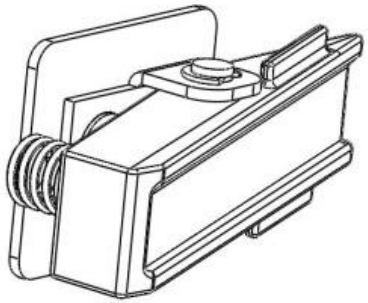

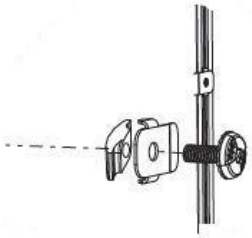

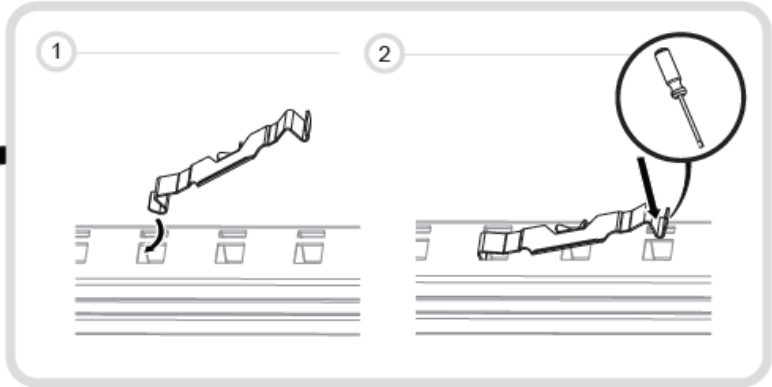
1
2

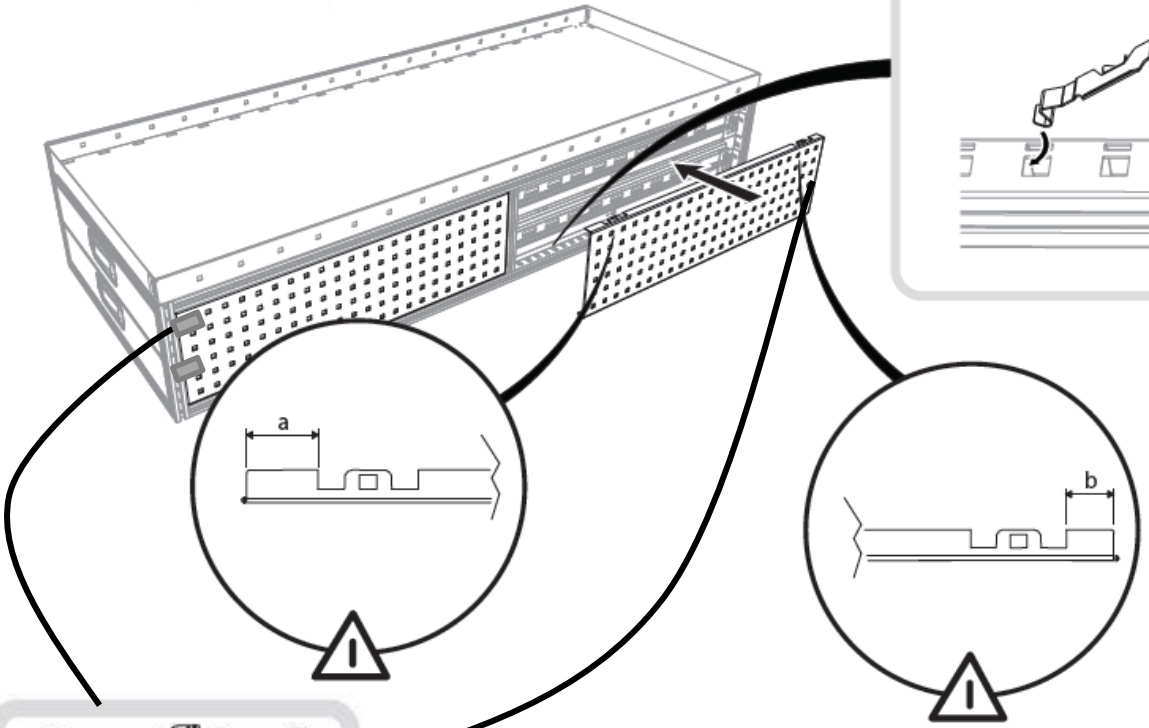
a
b

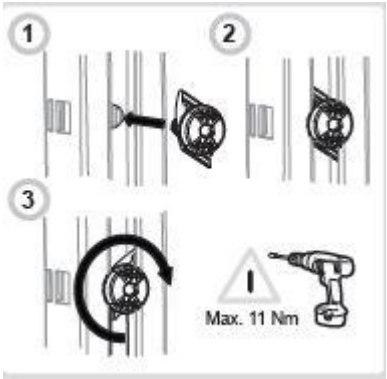
1
2
3
Max. 11 Nm

4x (M6 x 16)

MODUL-SYSTEM 3028_01

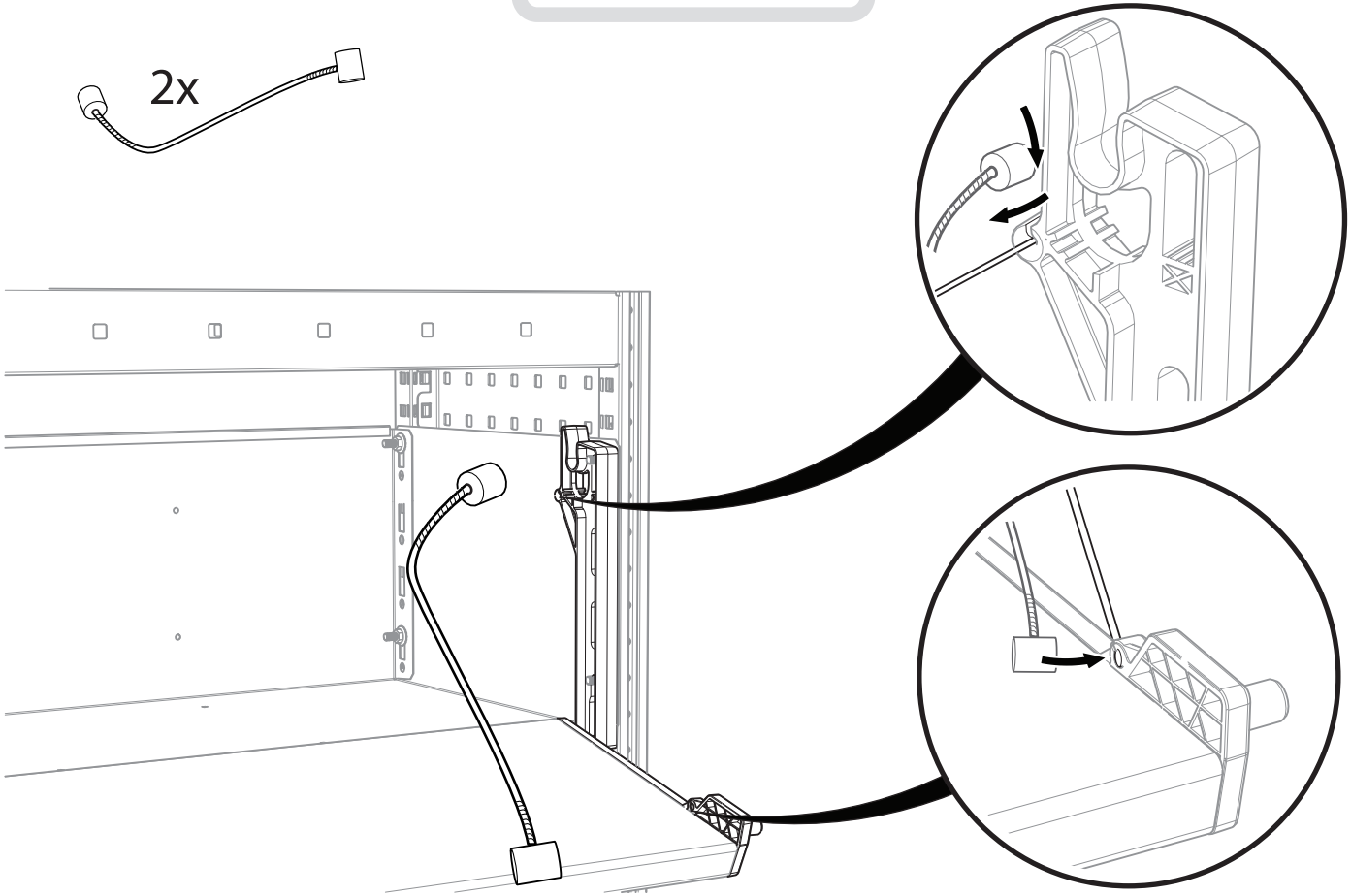

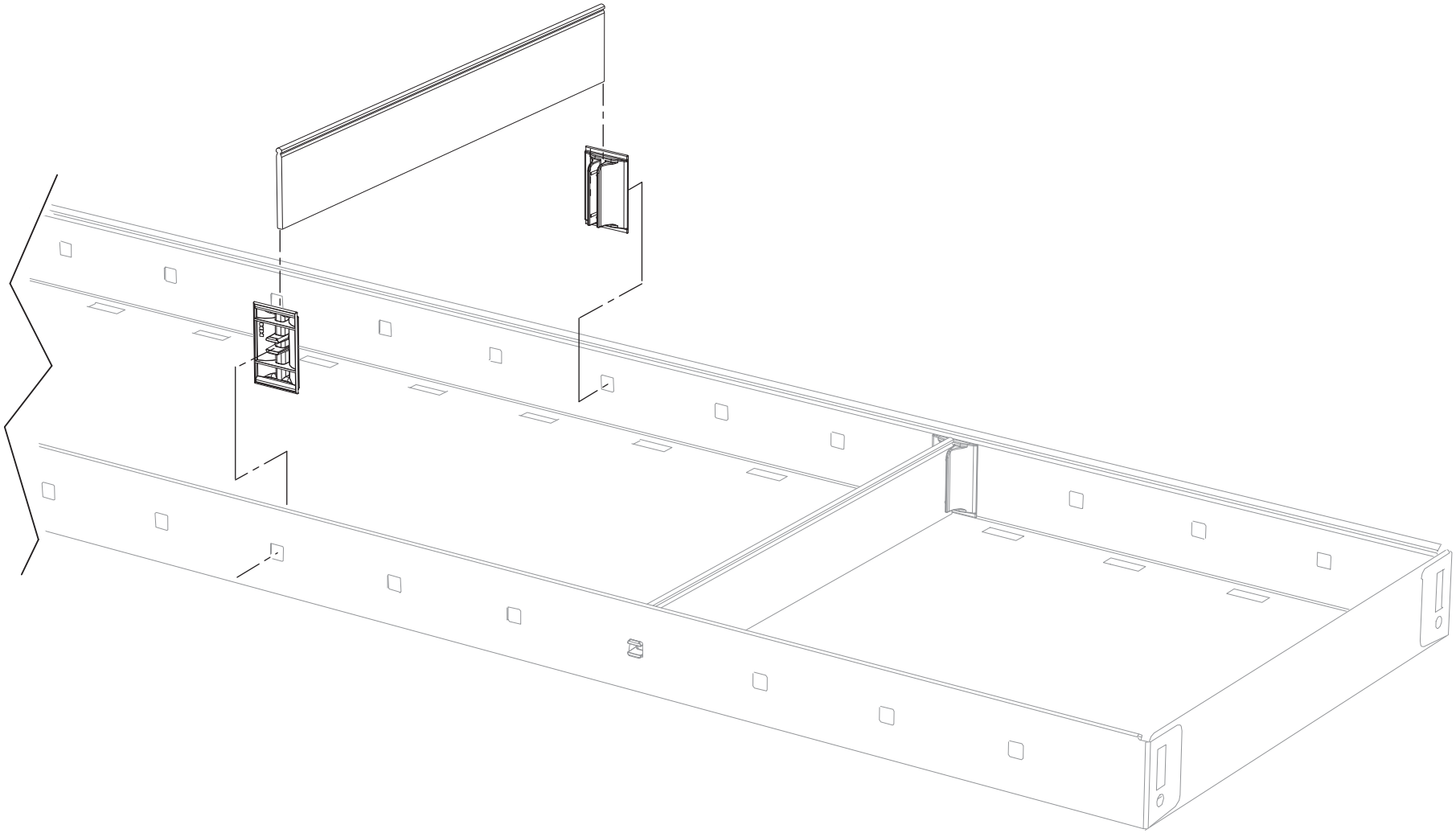

1

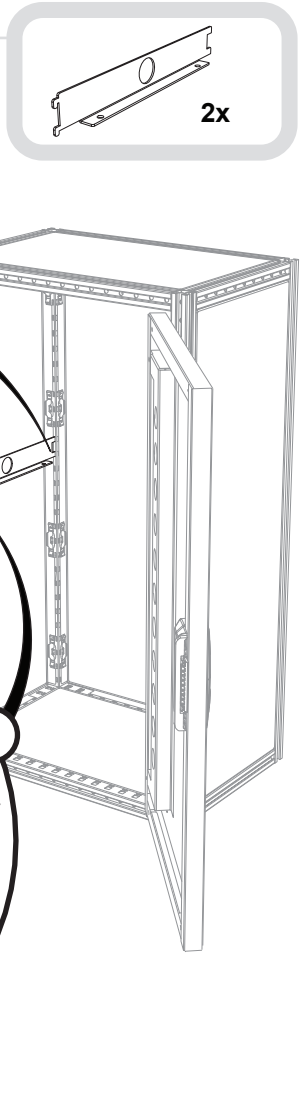

2

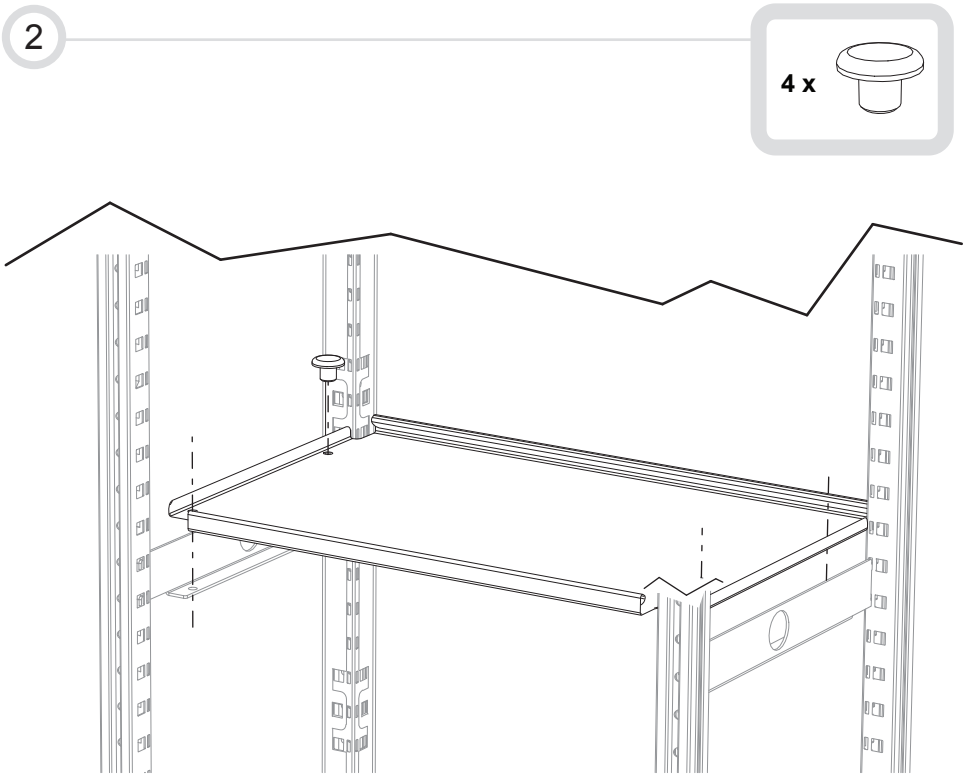

MODUL-SYSTEM 3023_02

1

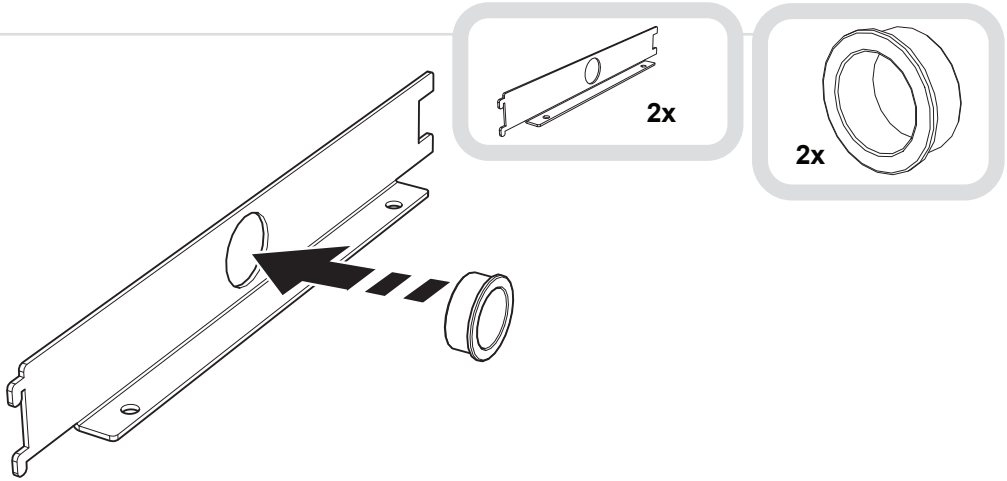

2

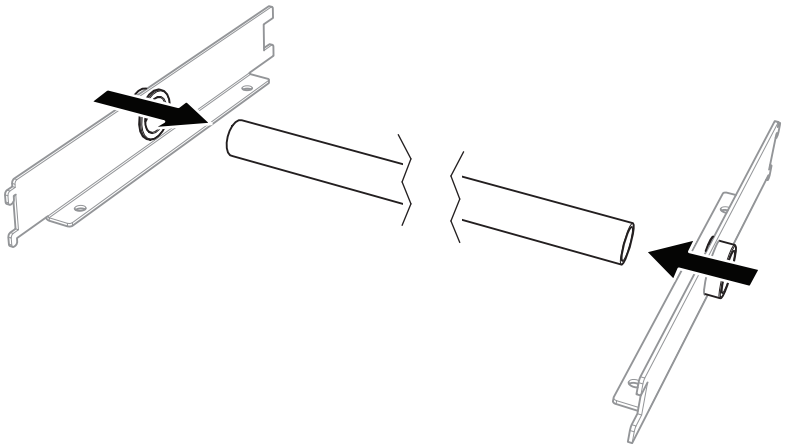

3

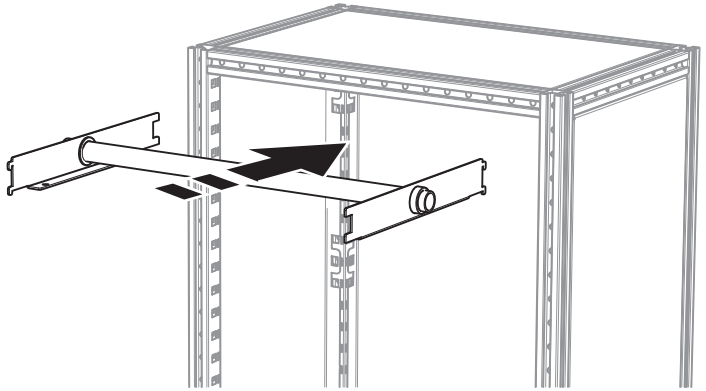

4

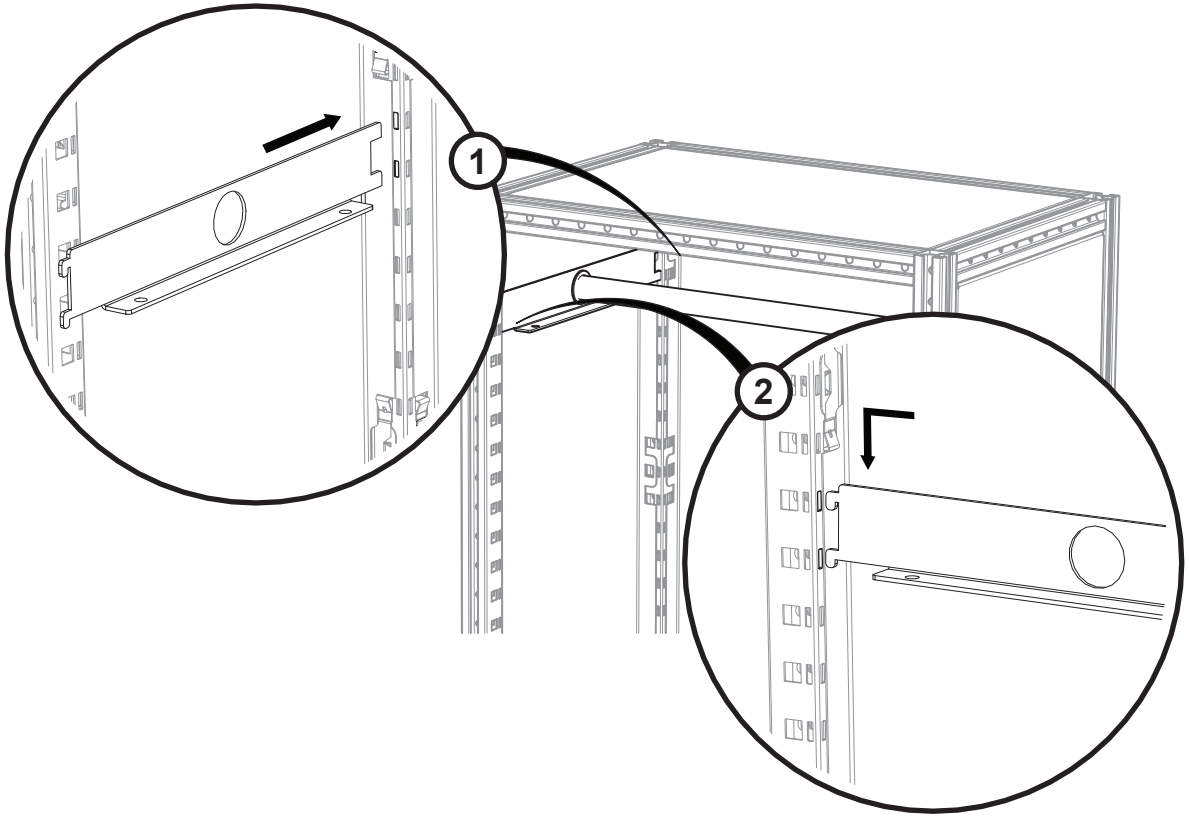

3030_02

1

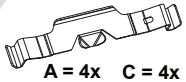

A = 4x C = 4x
B = 8x D = 4x

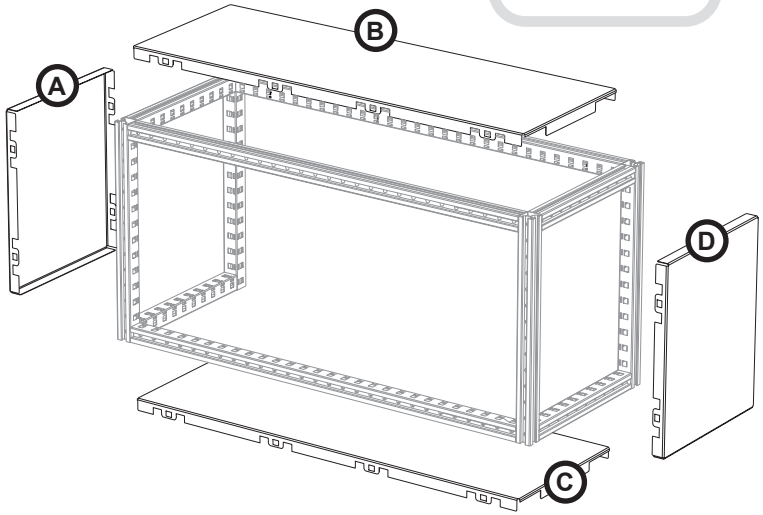

2

4x (M6 x 12)

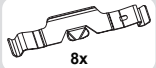

8x

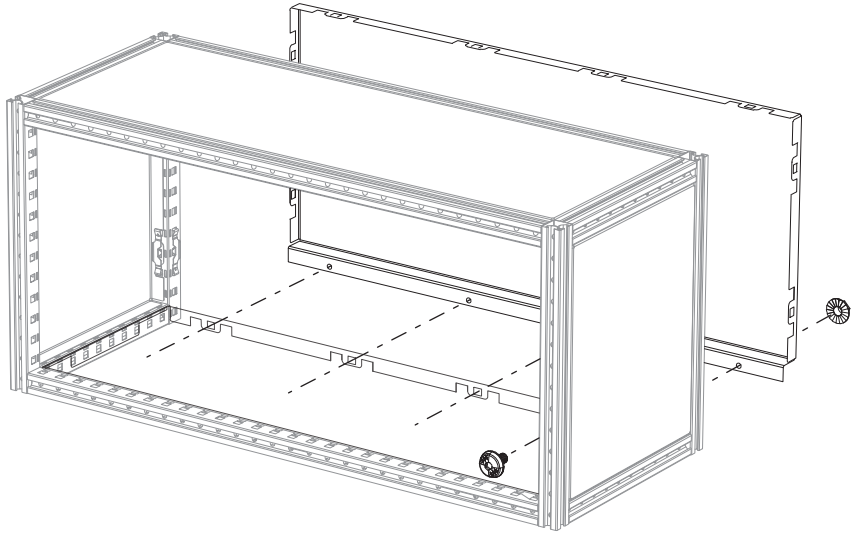

1

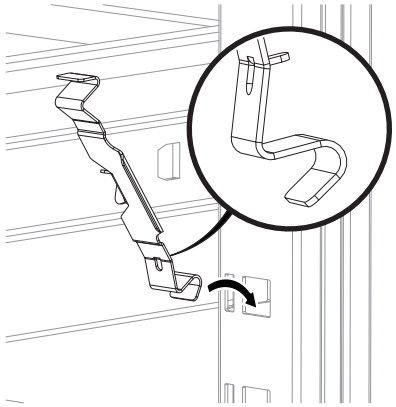

2

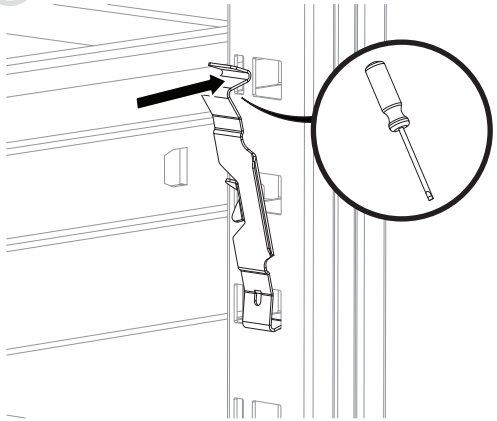

MODUL-SYSTEM 3007_04

2x (M6 x 25)

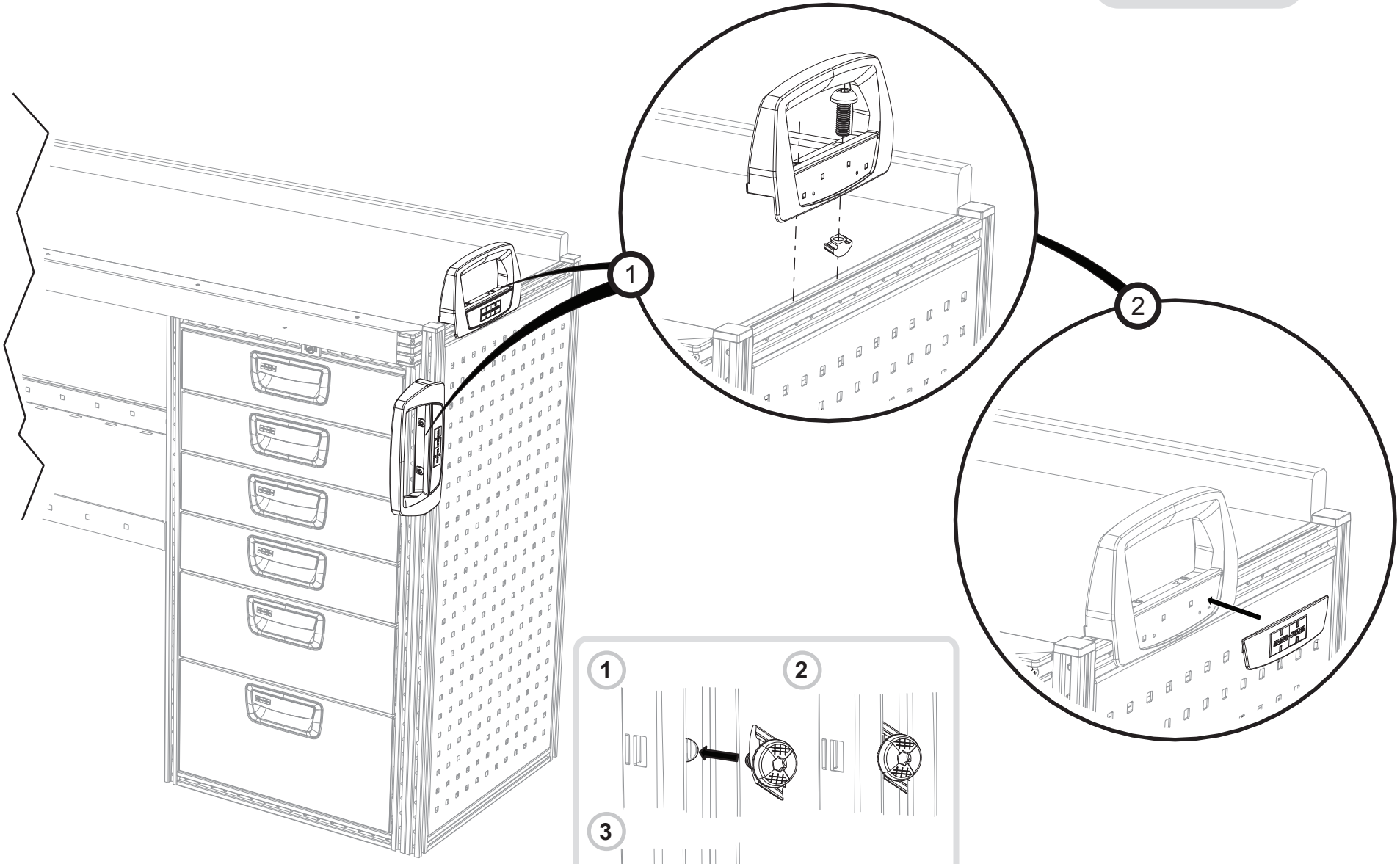

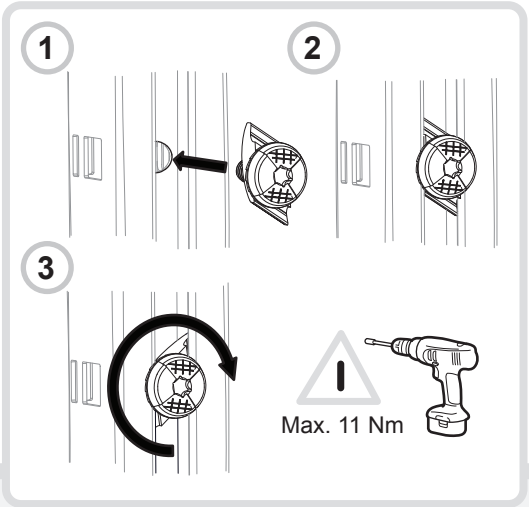

MODUL-SYSTEM 3008_02

1

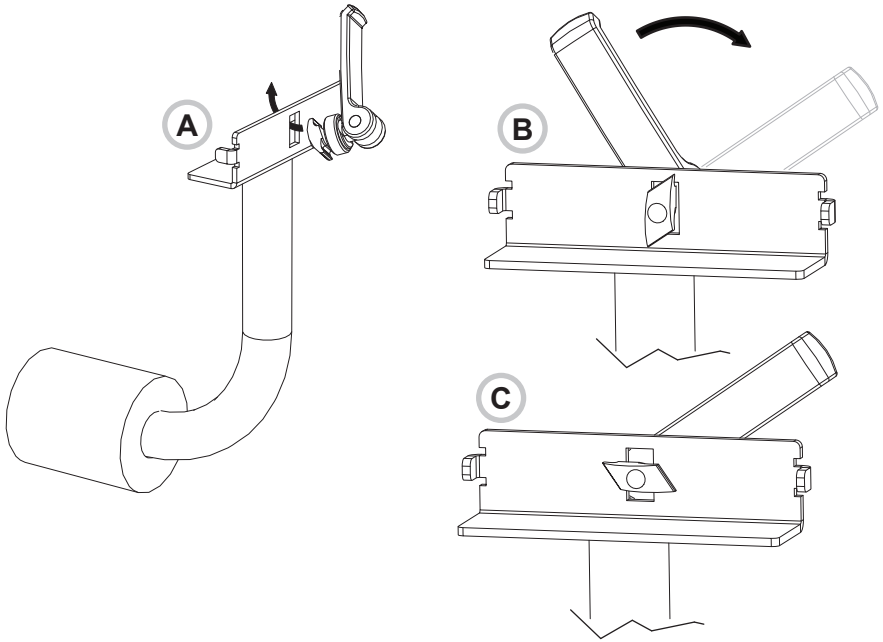

2

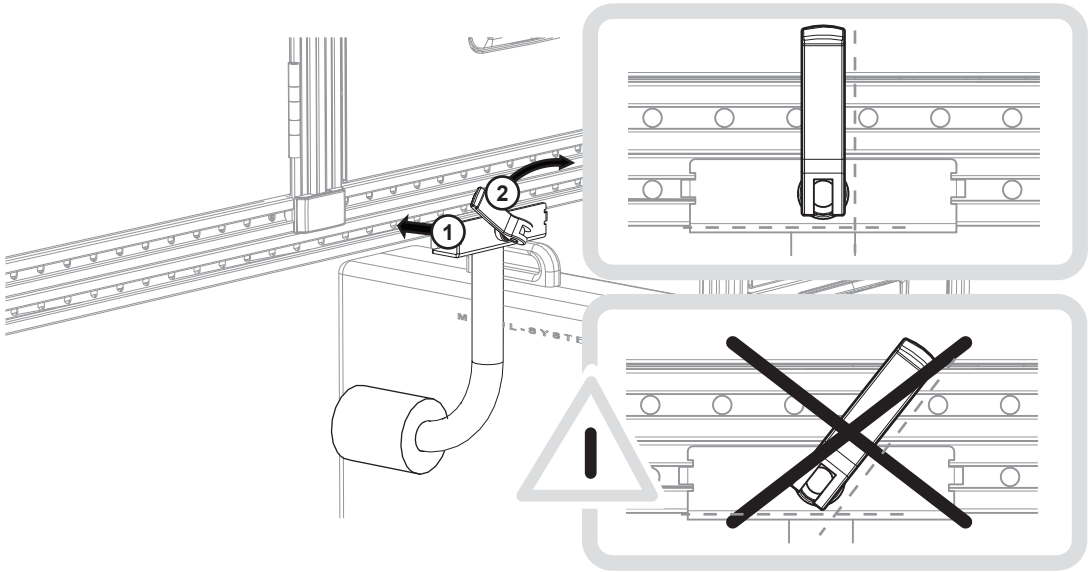

3

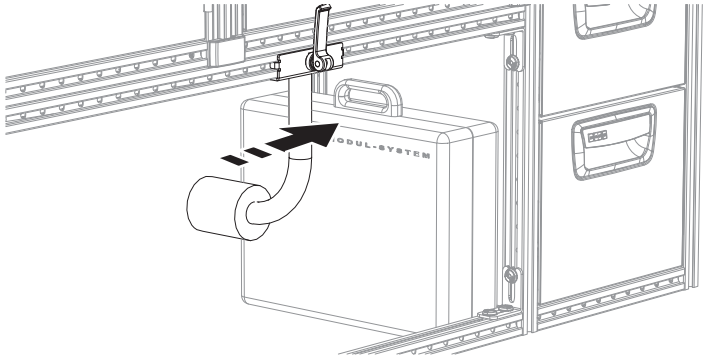

4

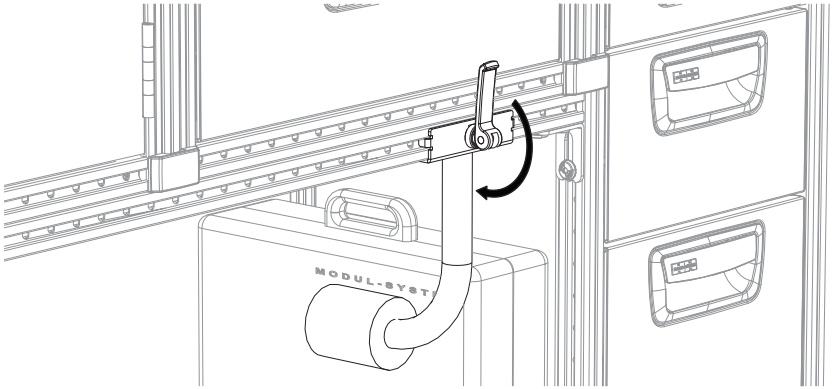

5

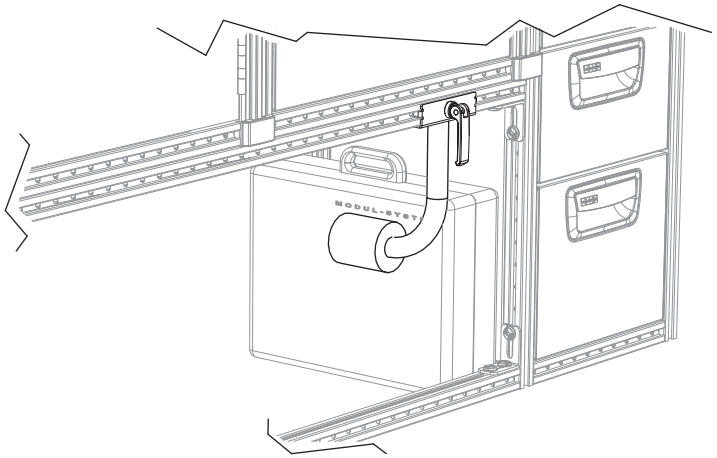

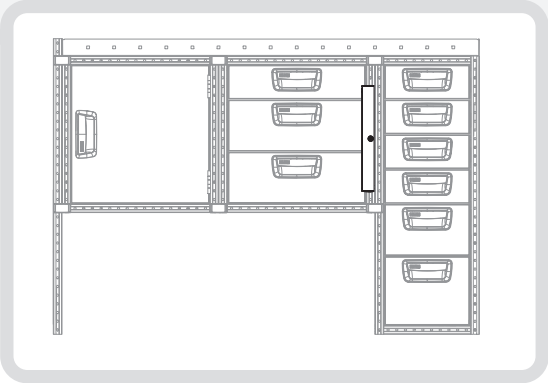

MODUL-SYSTEM 3005_02

1

2

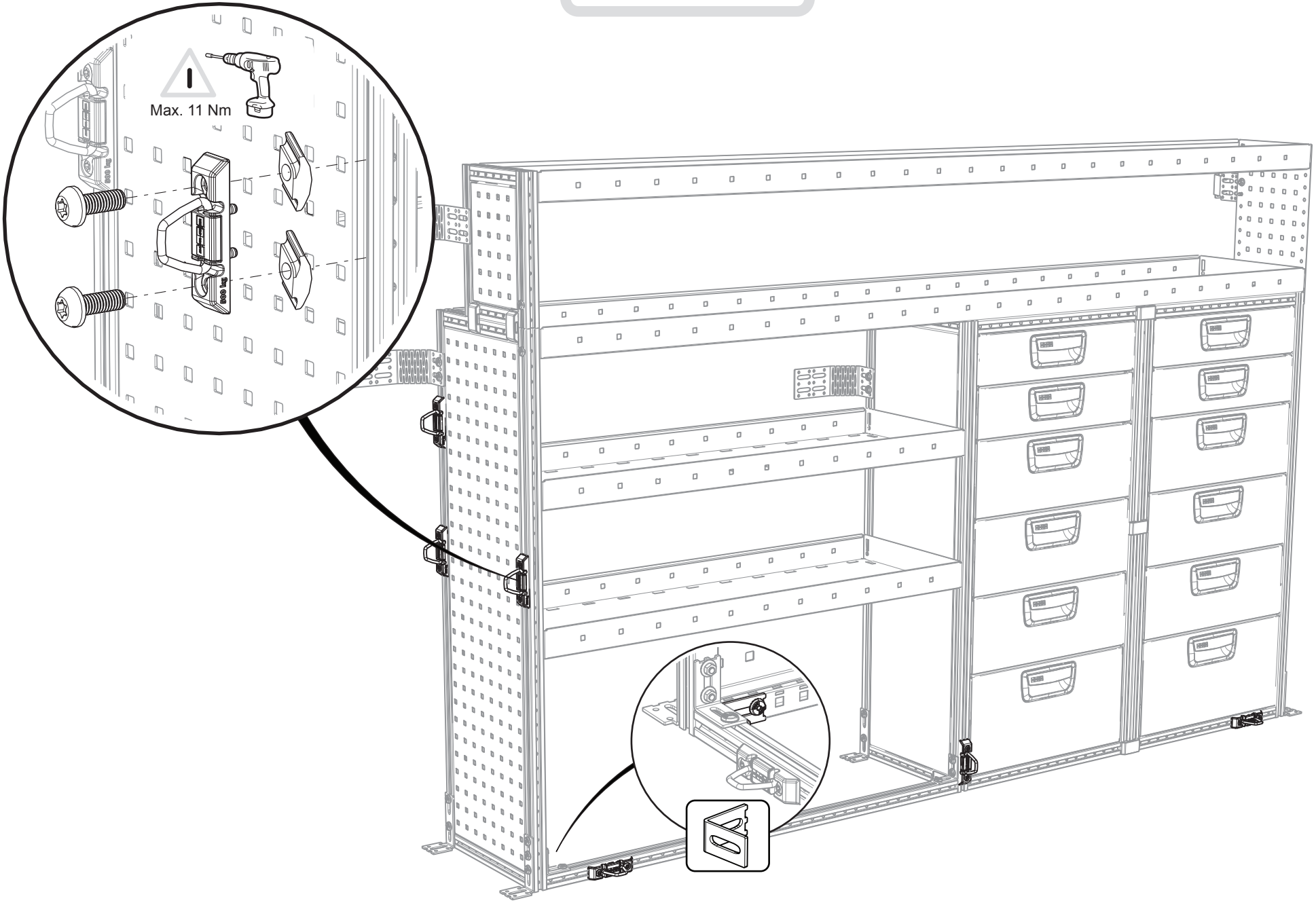
Max. 11 Nm

MODUL-SYSTEM 3112_02

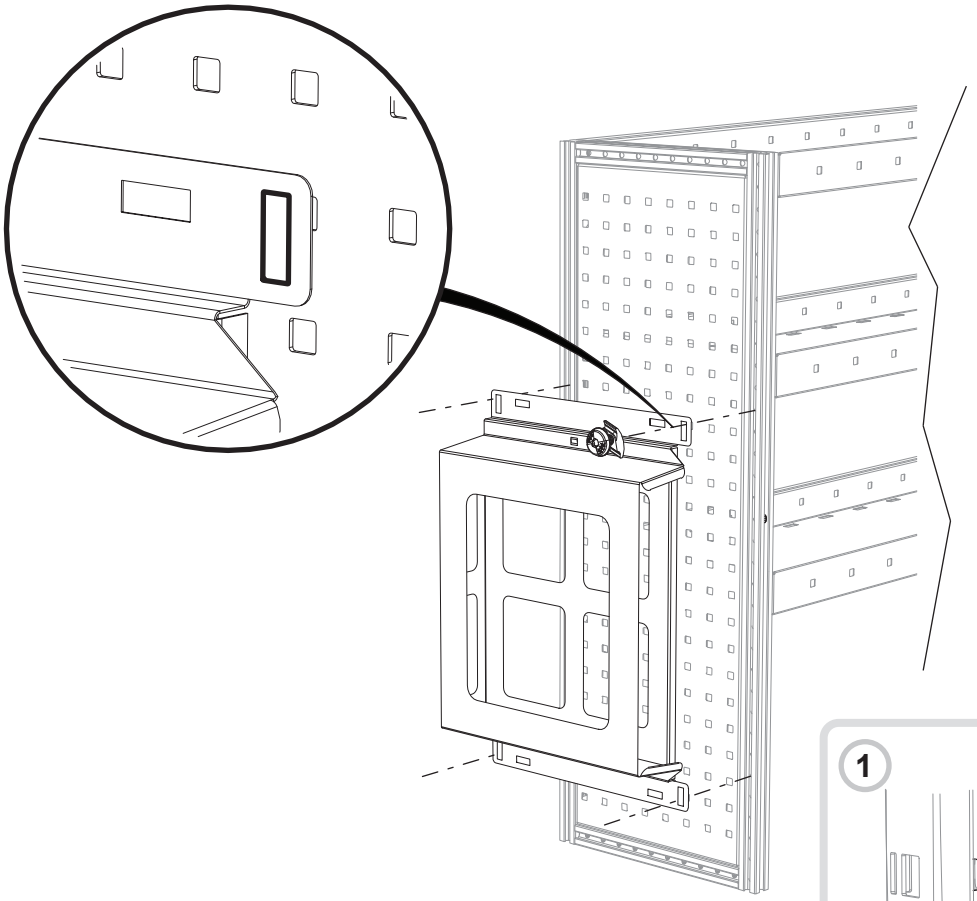

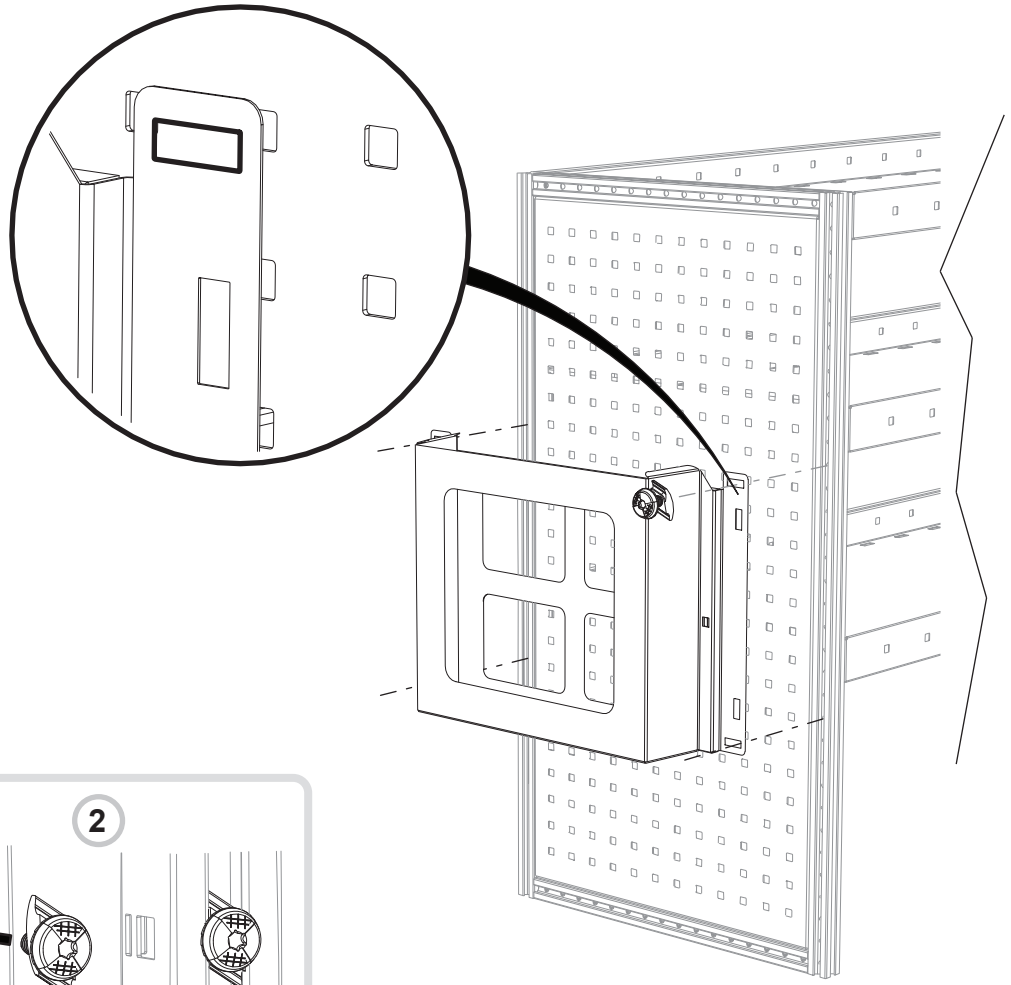

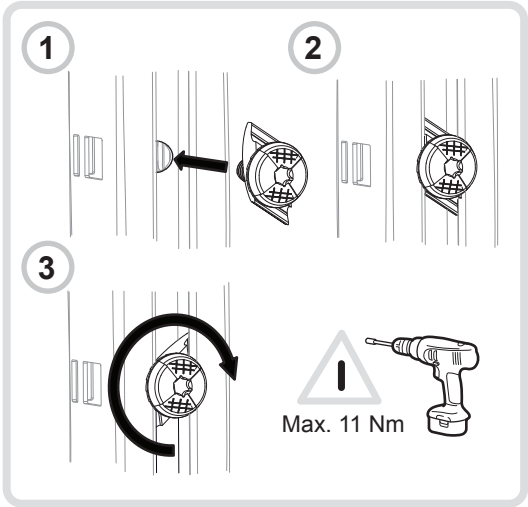

4x (M6 x 16)

4x (M6 x 16)

MODUL-SYSTEM 3027_02

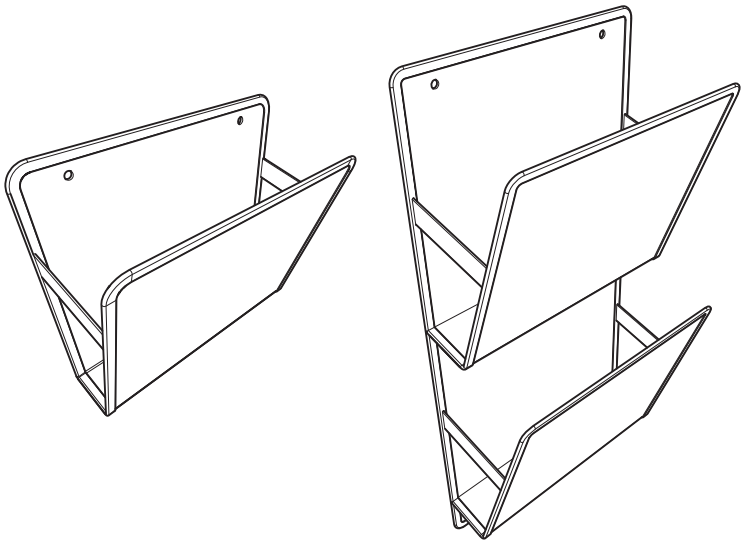

2x

2x

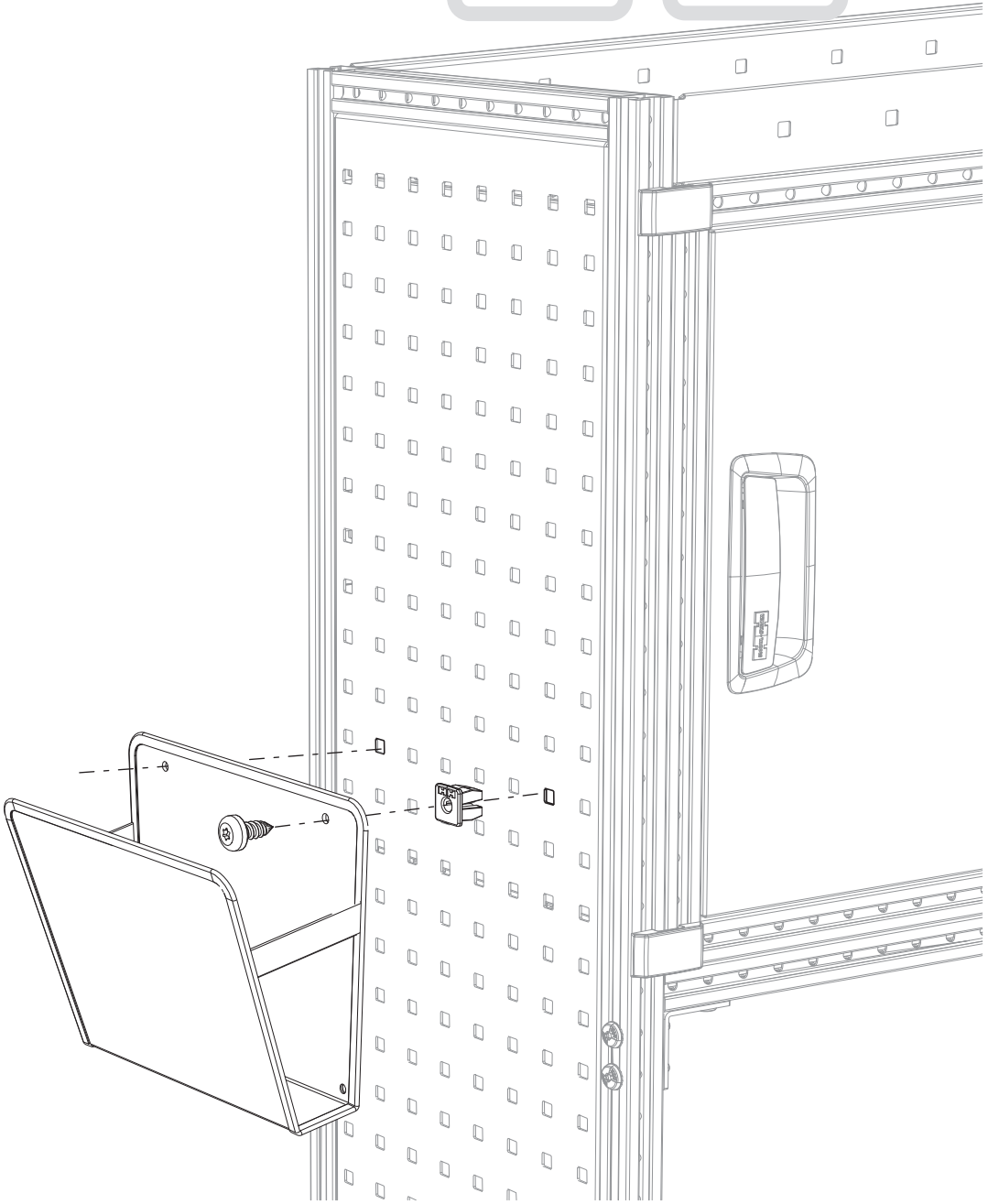

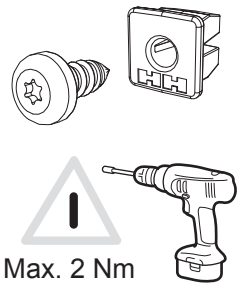

MODUL-SYSTEM 3038_03

1

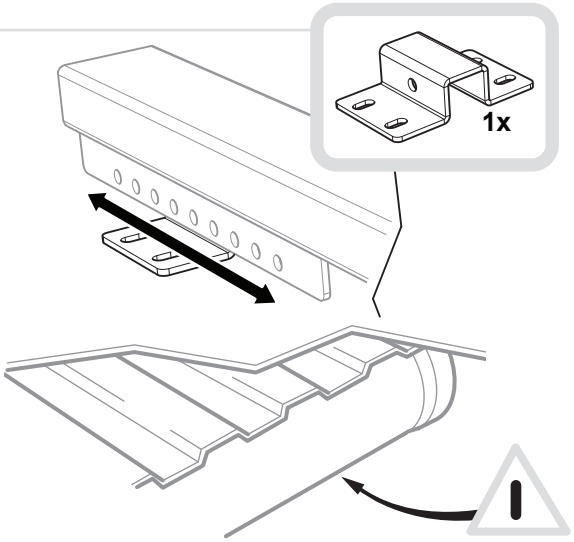

2

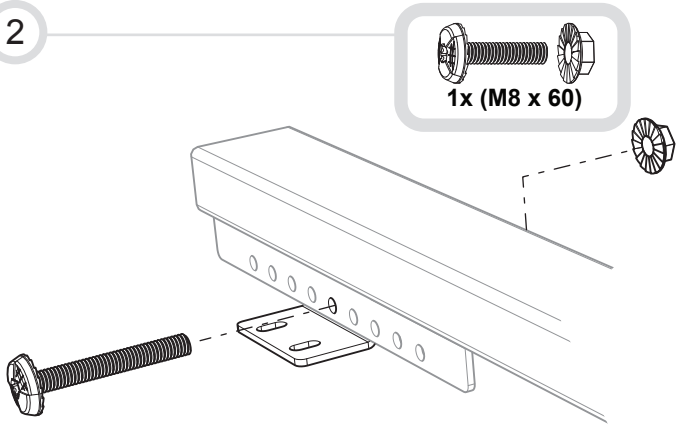

3

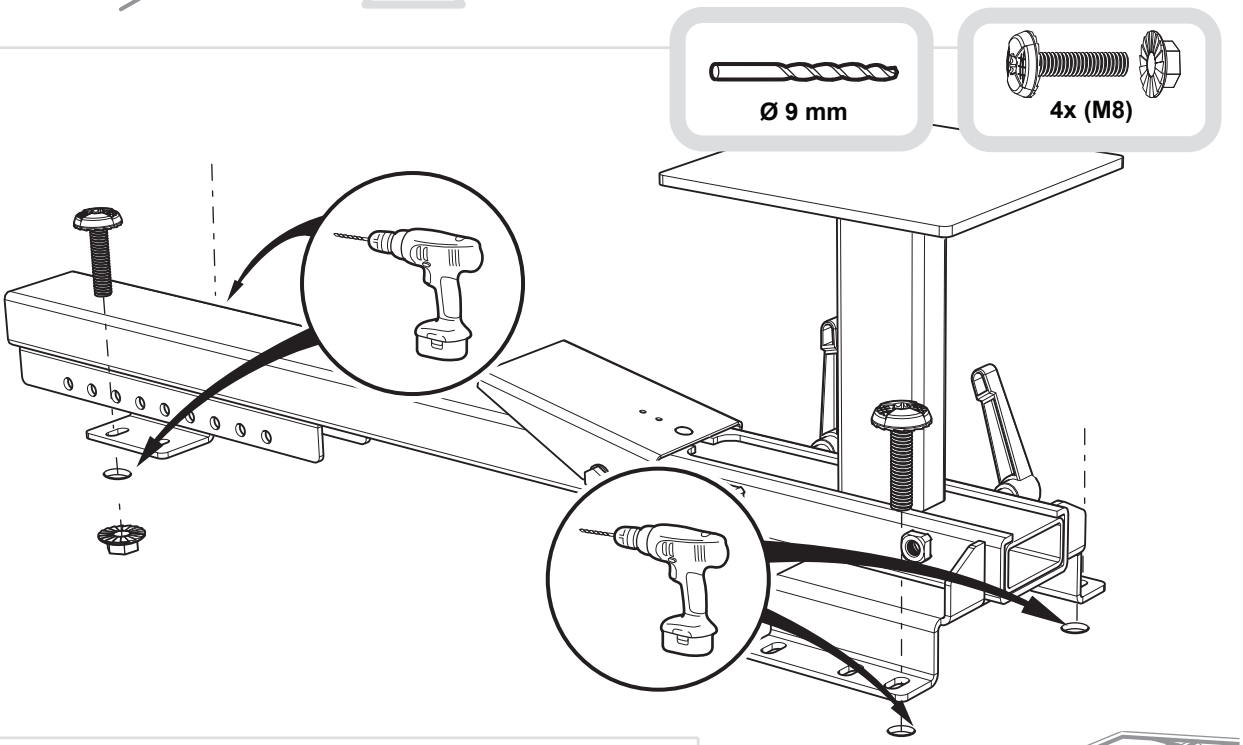

4

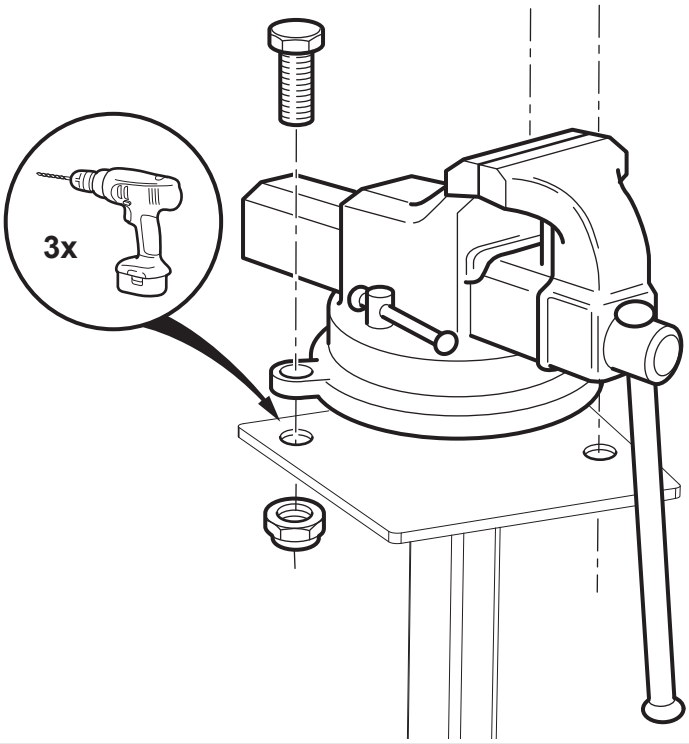

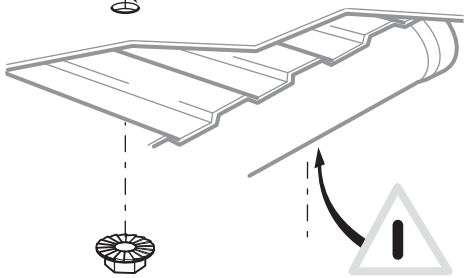

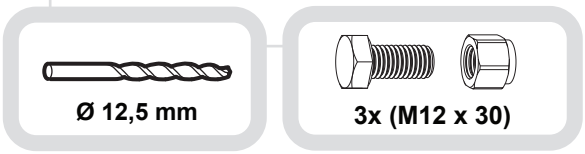

MODUL-SYSTEM 3120_02

2x (M6 x 16)

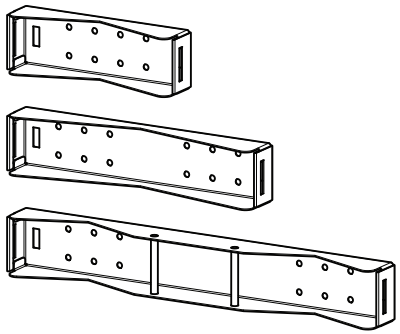

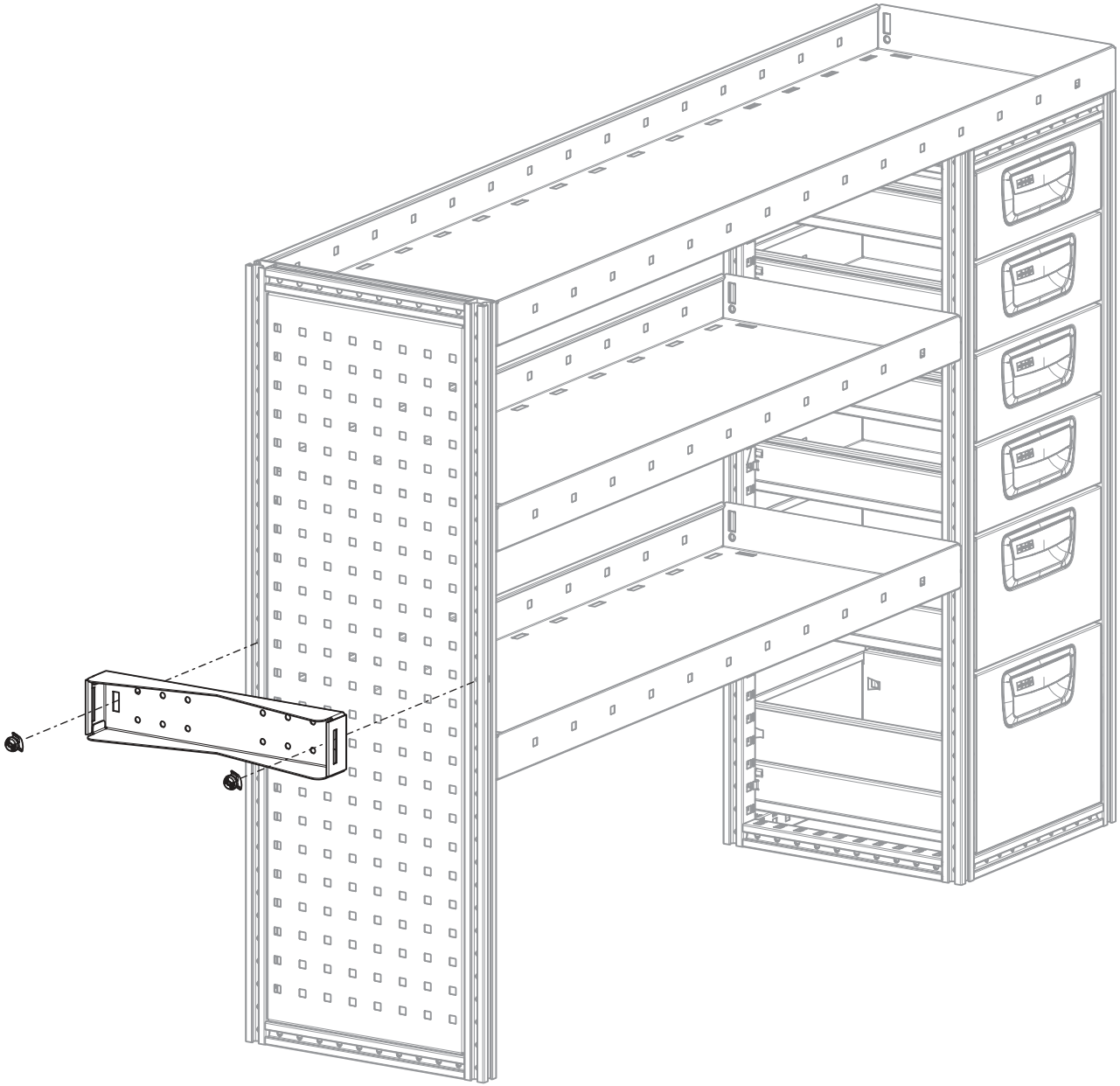

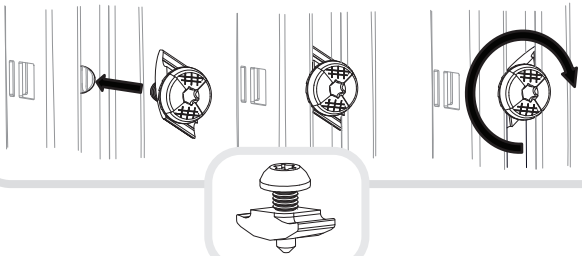

MODUL-SYSTEM 3058_05

1

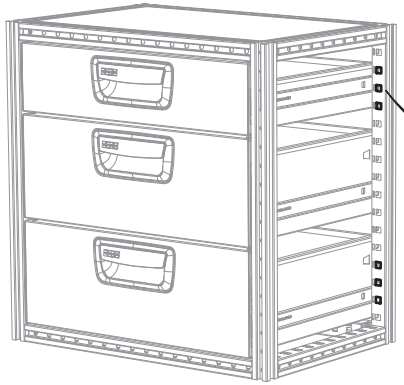

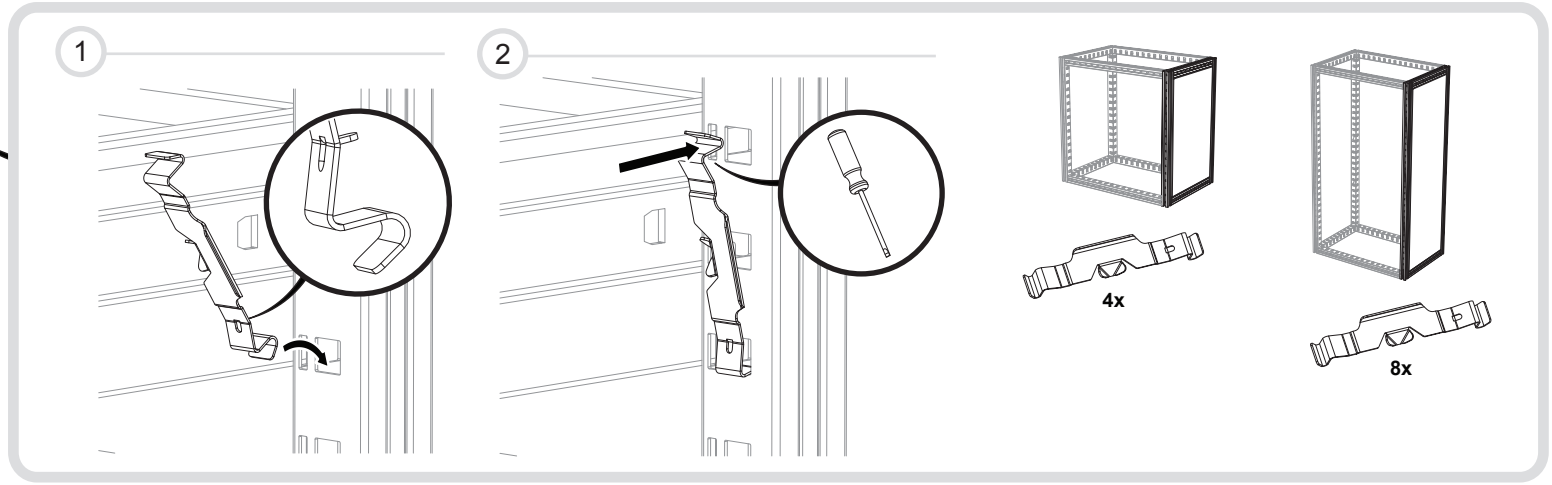

2

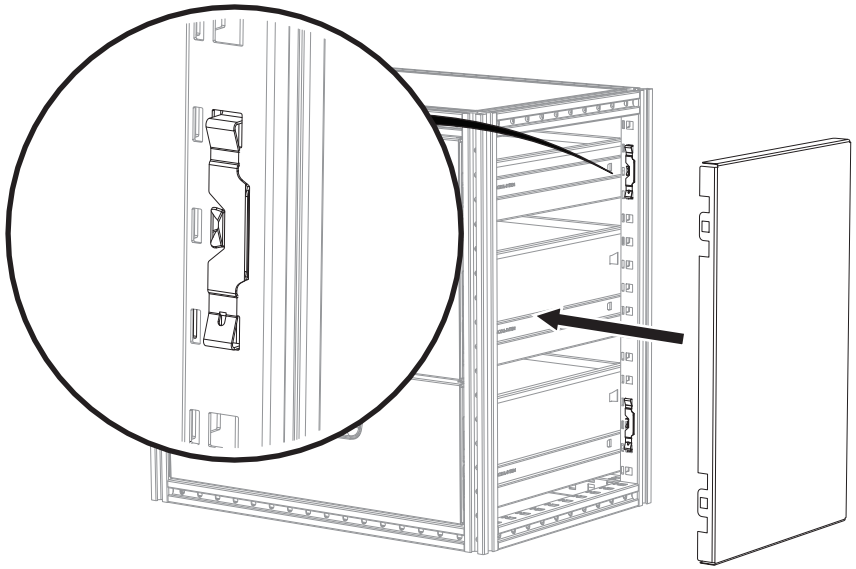

3

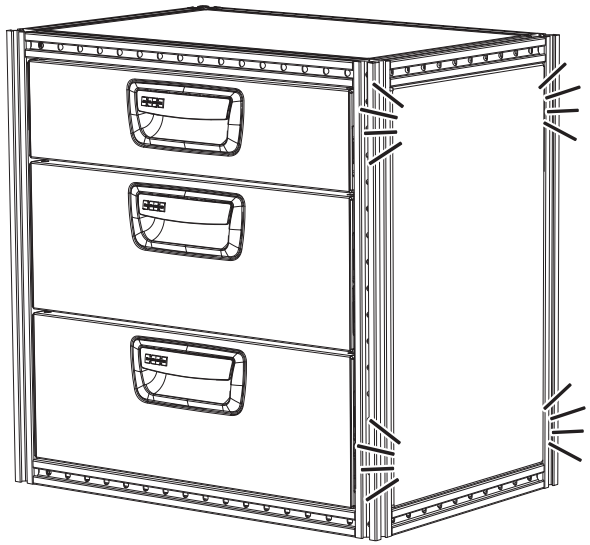

MODUL-SYSTEM 3017_04

1

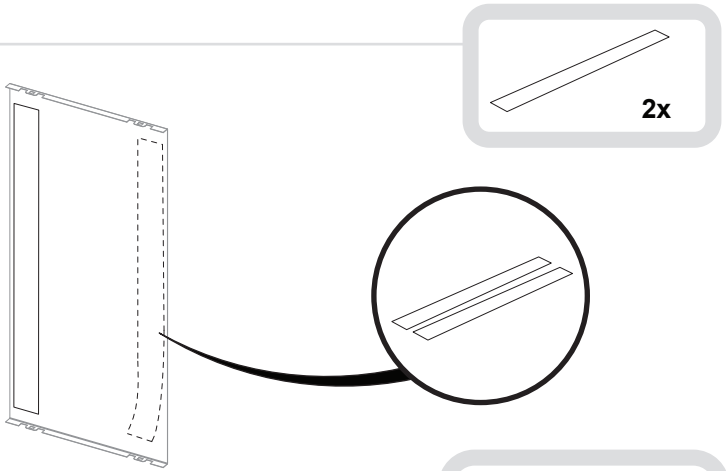

2x

2

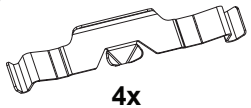

4x

2

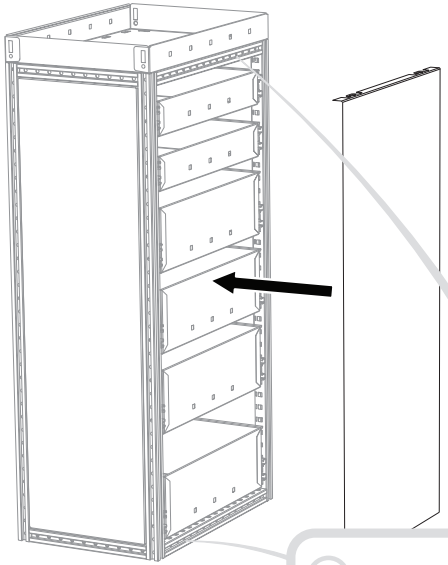

1

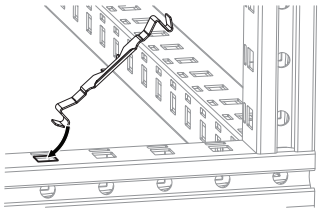

2

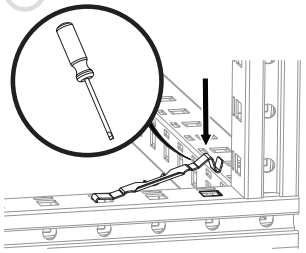

2

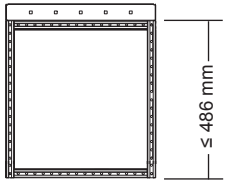

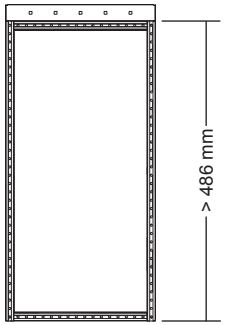

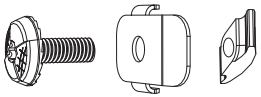

4x (M6 x 16)

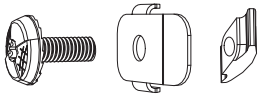

6x (M6 x 16)

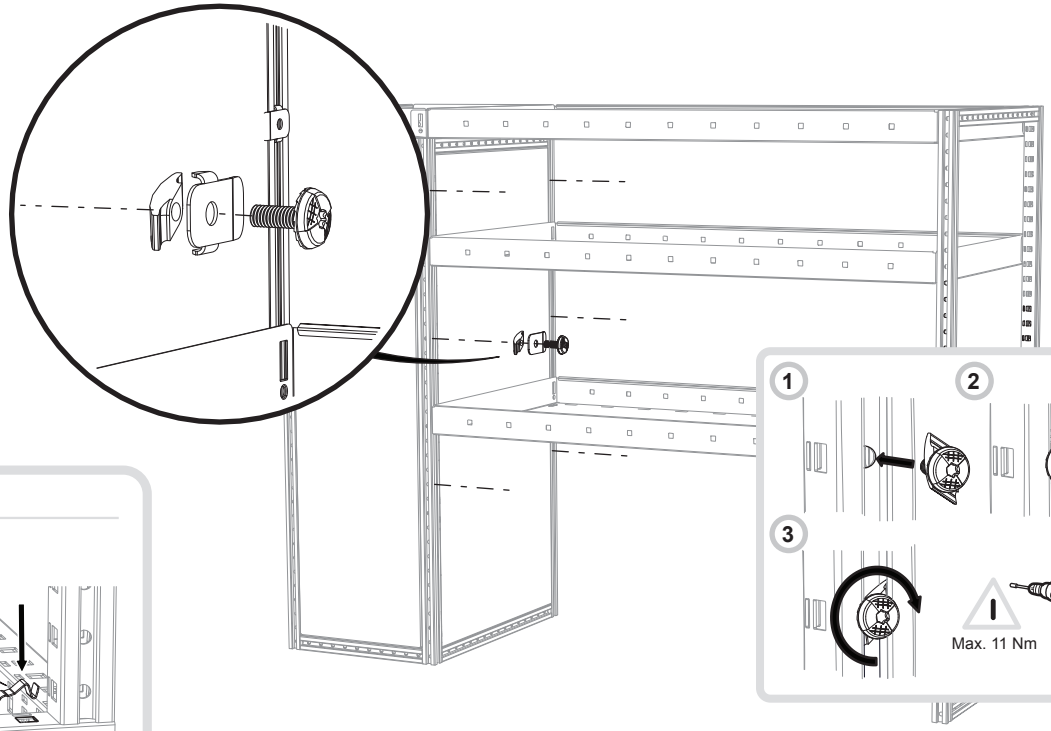

1

2

3

MODUL-SYSTEM 3016_01

1

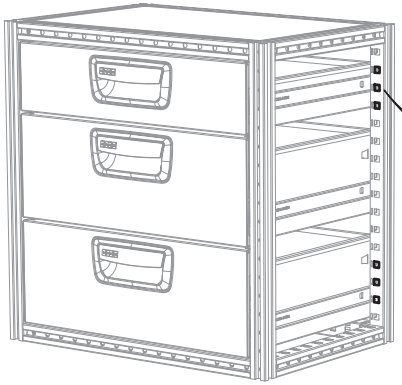

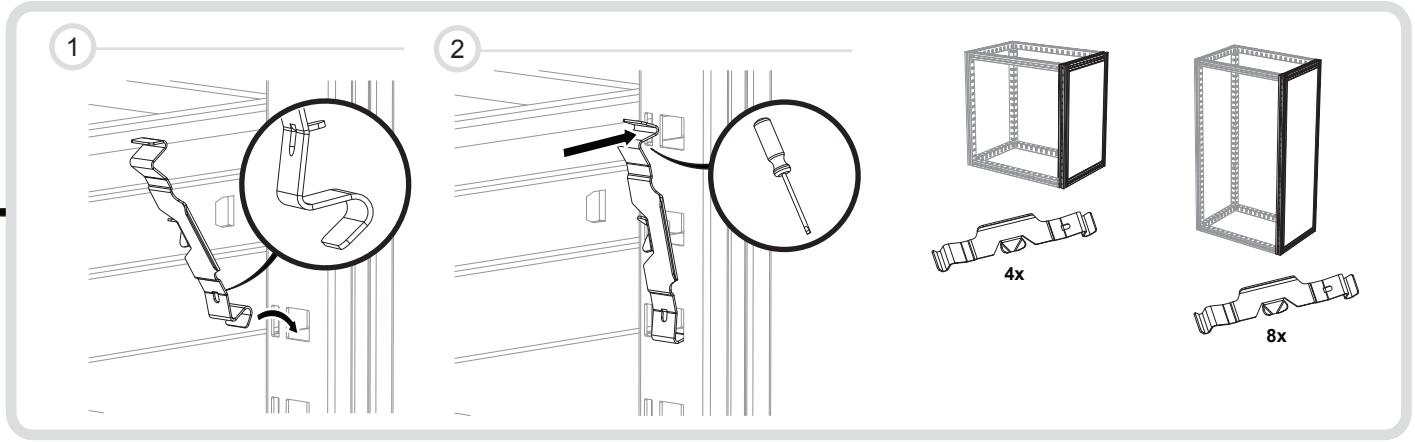

2

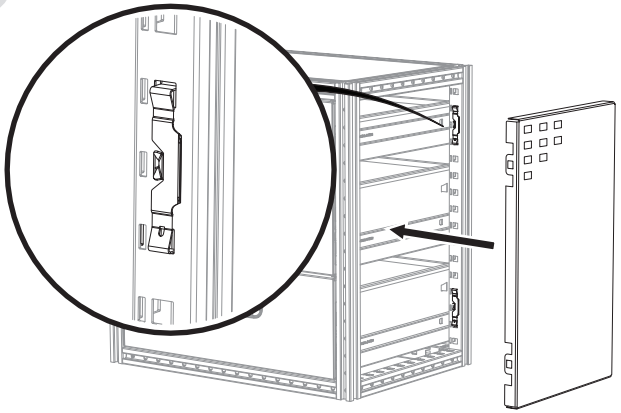

3

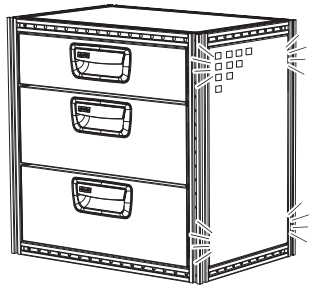

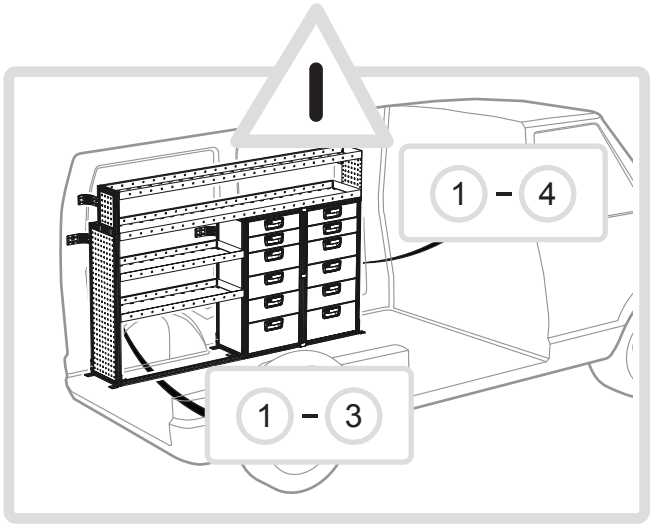

4

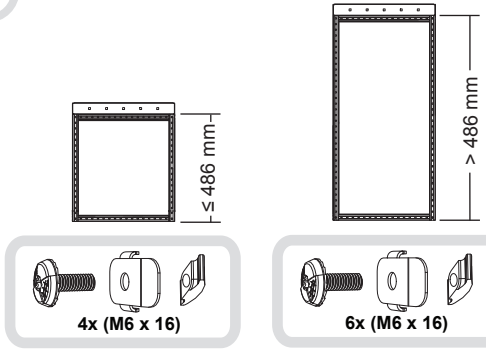

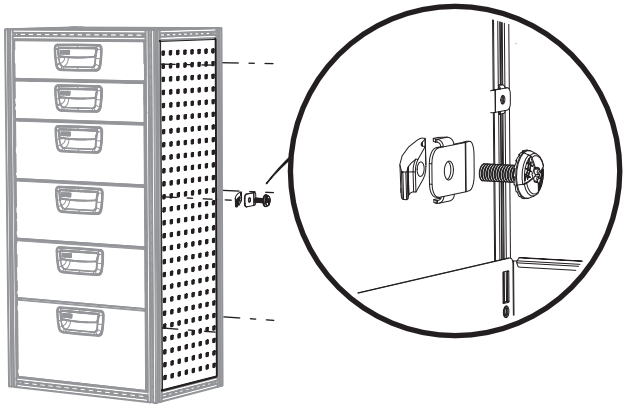

MODUL-SYSTEM 3062_01

1

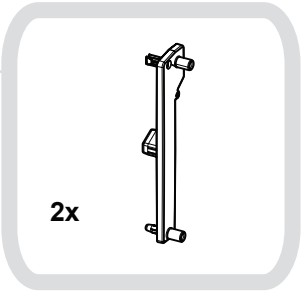

2

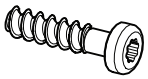

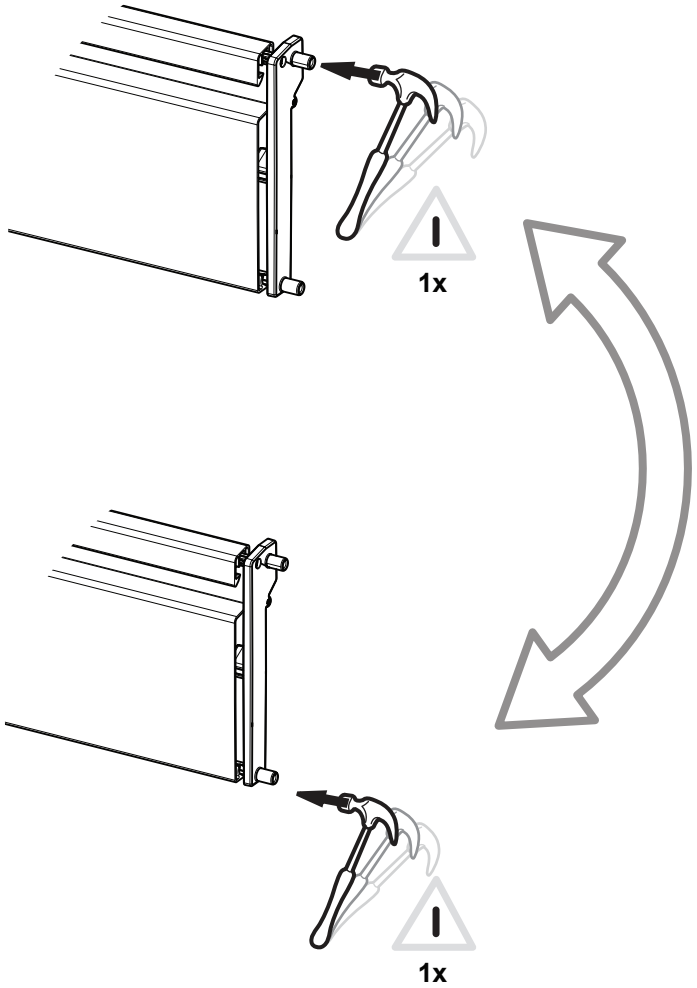

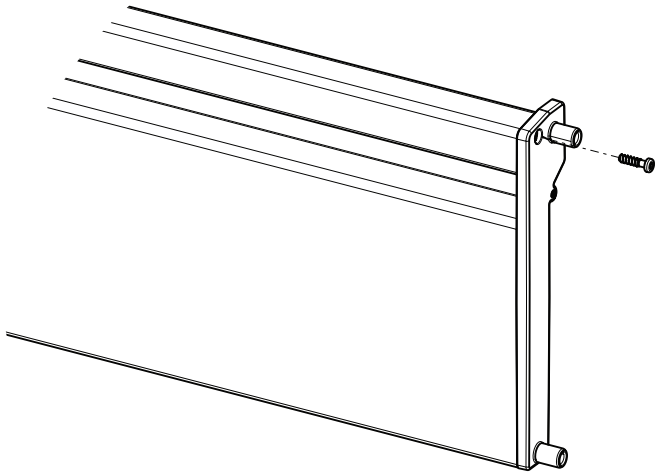

1

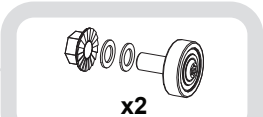

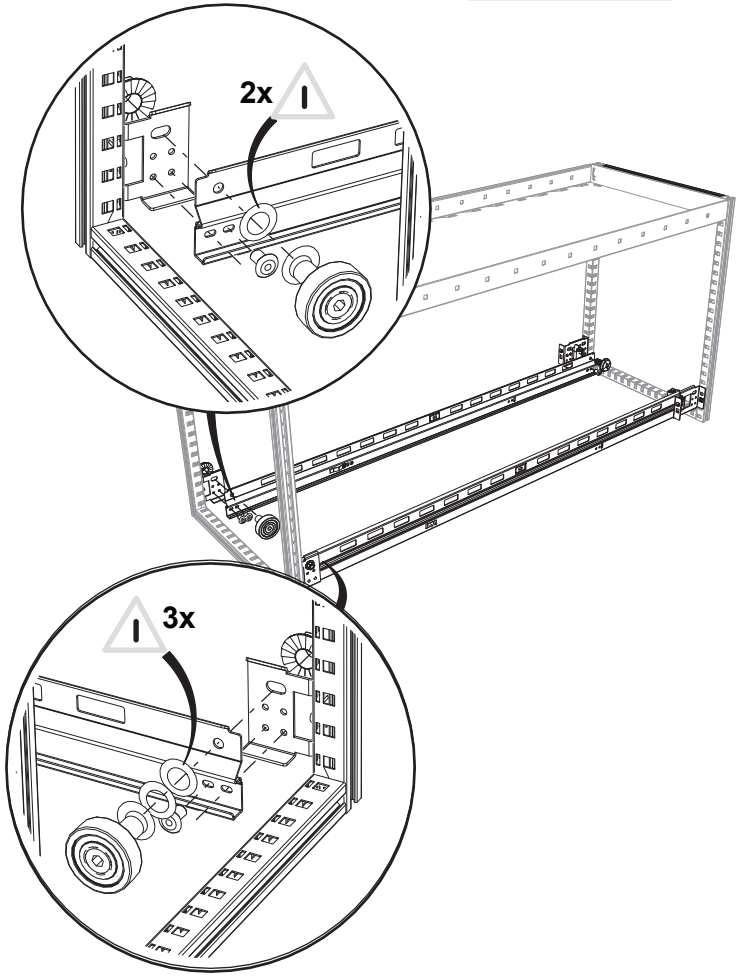

2

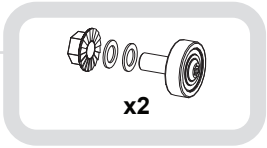

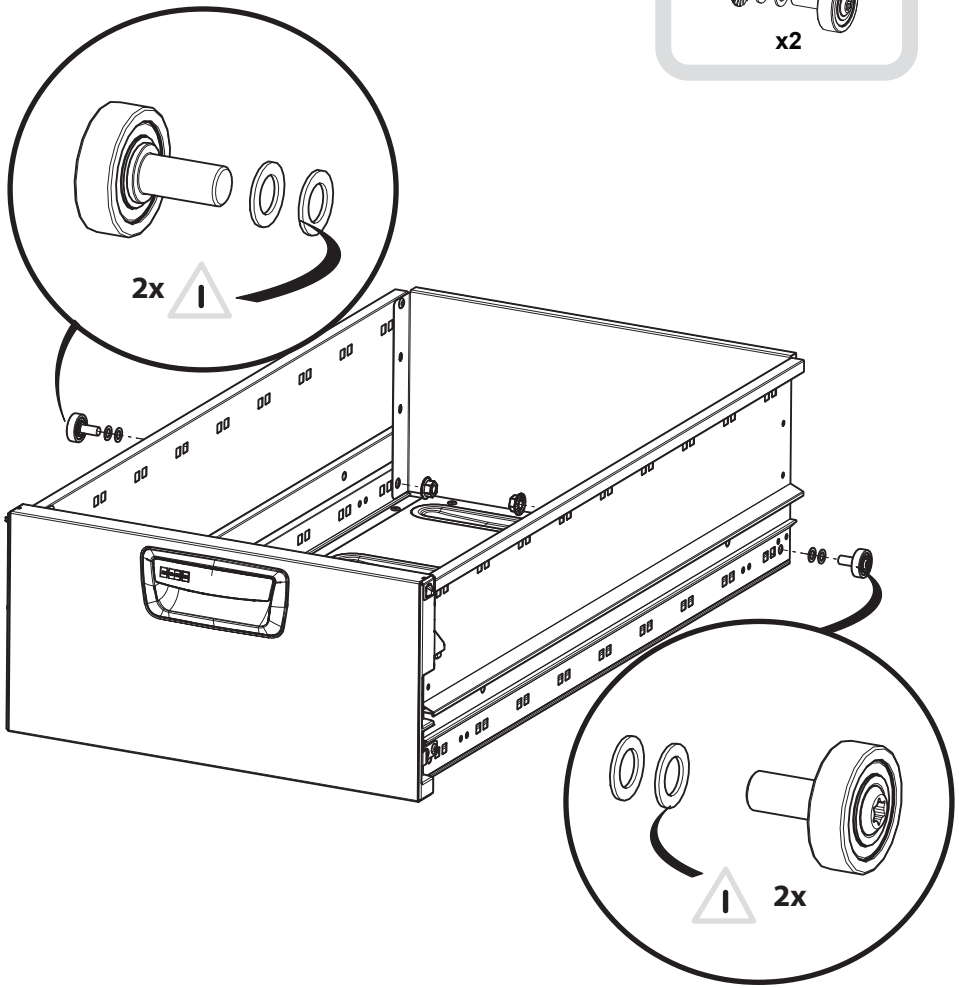

MODUL-SYSTEM 3064_01

1

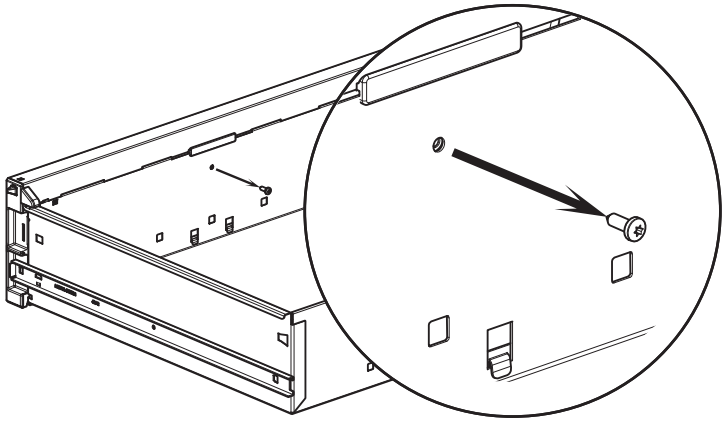

2

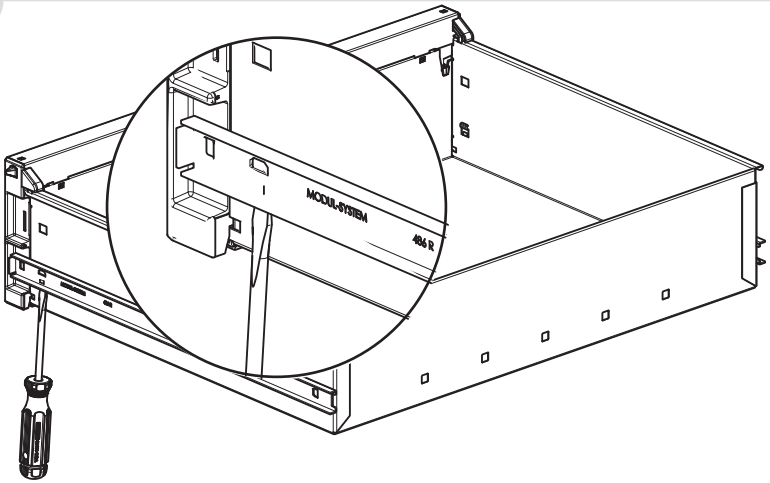

3

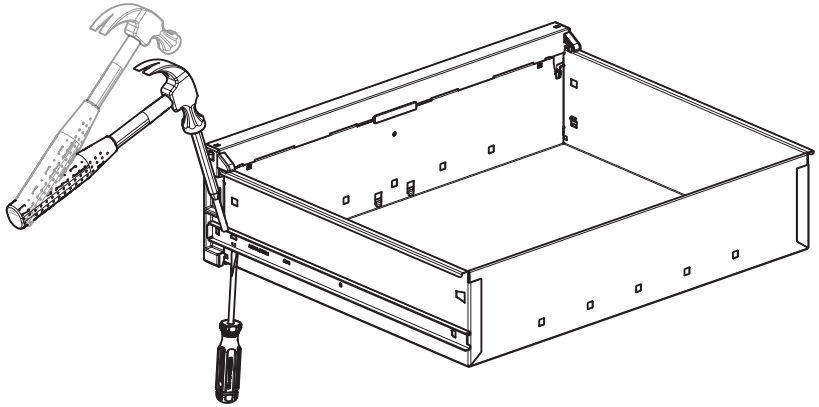

4

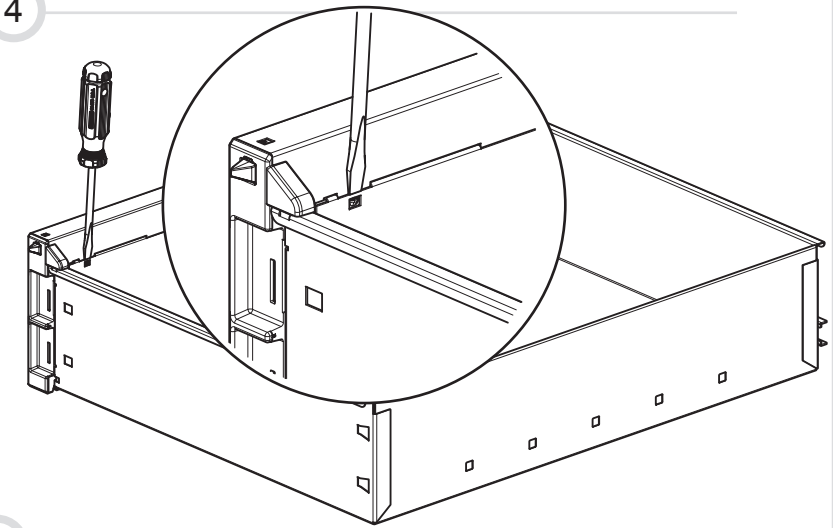

5

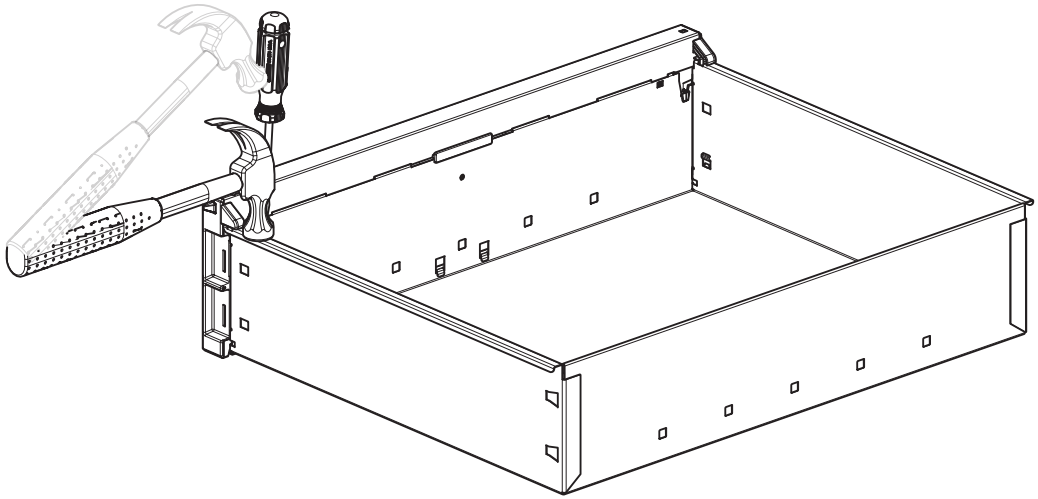

6

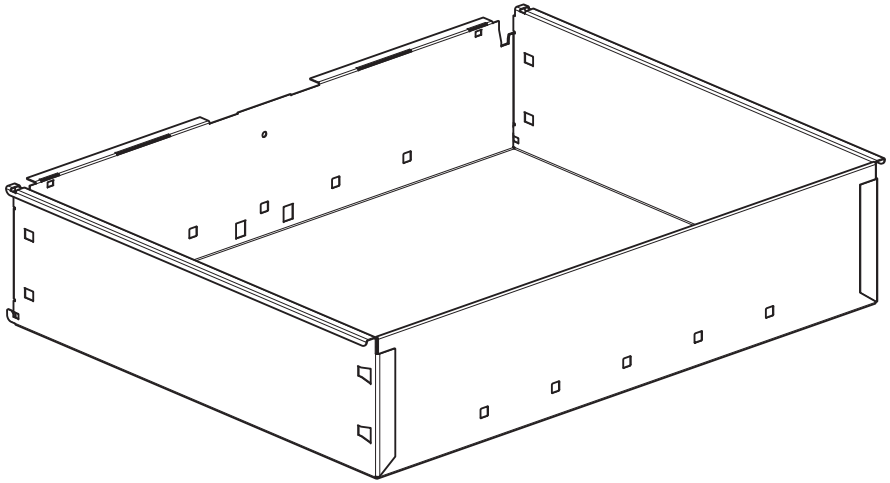

8

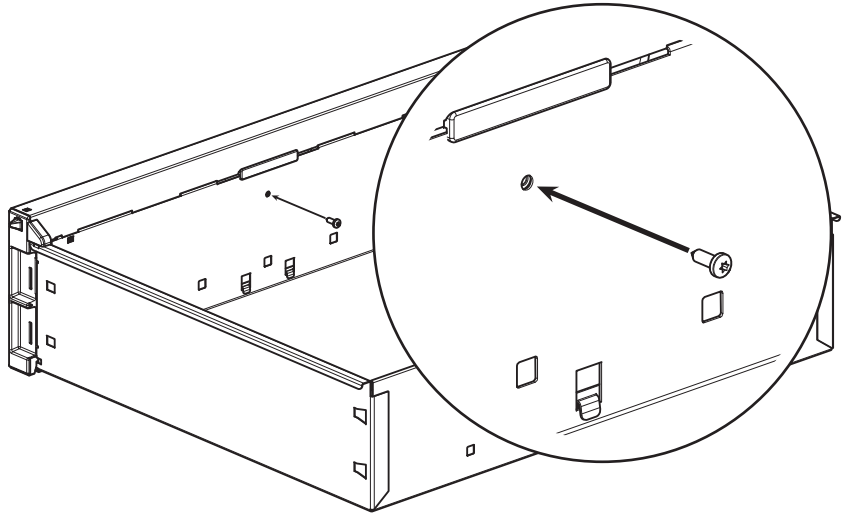

7

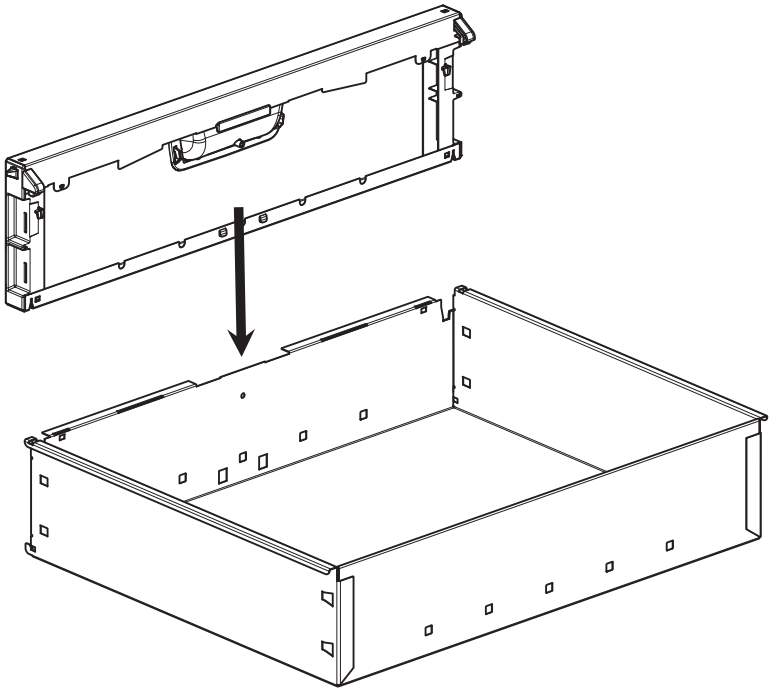

9

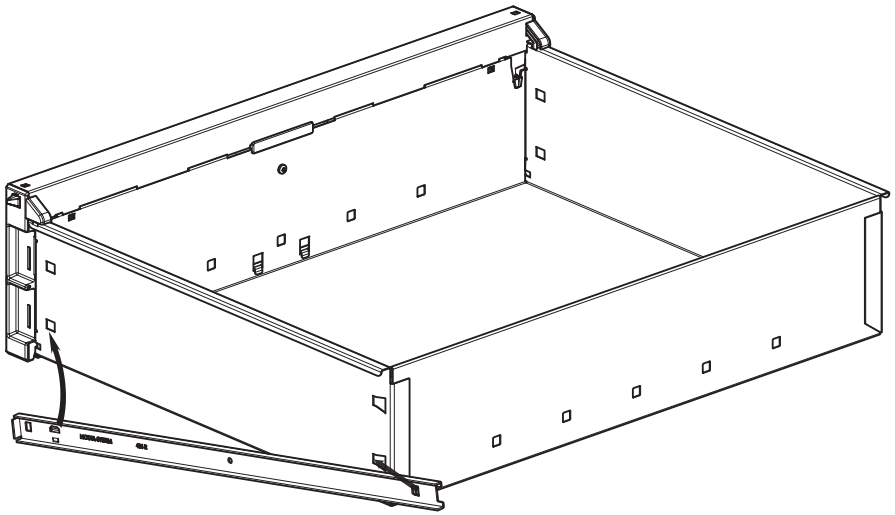

MODUL-SYSTEM 3041_03

1x

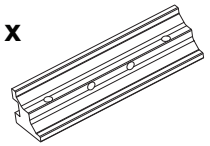

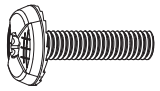

2x (M6 x 25)

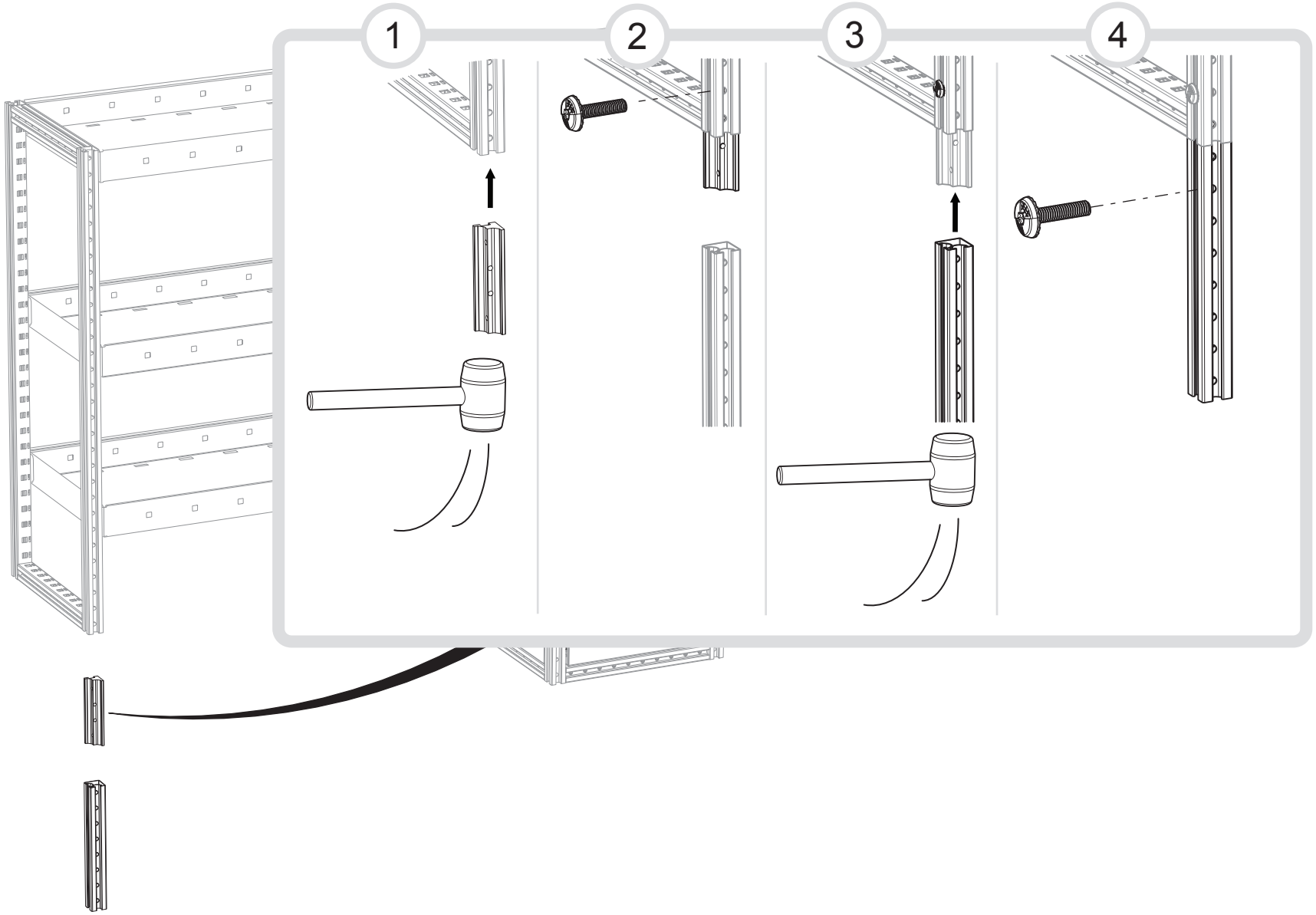

MODUL-SYSTEM

11491-03

Skruvsats • Jeu de vis
Set of Nuts and Bolts • Universalmontagesatz

R11893 Rivet 4,8x14 12pc.	R11895 Rivet 4,8x30 24pc.			
R50603 Safety screw M6x35 12pc.	R50607 Safety nut M6 30pc.	R1073 01 Bits M6 1pc. R1074 01 Bits M8 1pc.	R50350 T track nut 20pc.	
R50601 Safety screw M6x16 16pc.	R5022 Plastic nut 4pc.	R1127 Washer 9x28 8pc.	R5061 Safety screw M8x16 6pc.	R50614 Safety screw M8x45 8pc.
R50604 Safety screw M6x40 14pc.	R5060 Safety screw M6x12 6pc.	R50616 Safety nut M8 8pc		

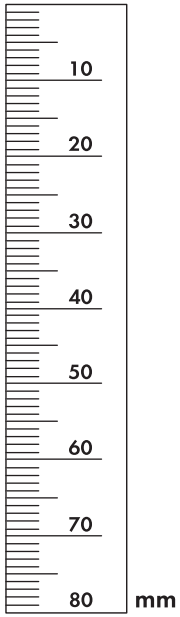

11491-03

Net weight
1.6 kg
Made in EU

MODUL-SYSTEM

11492-03

Skruvsats • Jeu de vis
Set of Nuts and Bolts • Universalmontagesatz

R11893 Rivet 4,8x14 24pc.	R11895 Rivet 4,8x30 24pc.			
R50603 Safety screw M6x35 20pc.	R50607 Safety nut M6 40pc.	R1073 01 Bits M6 1pc. R1074 01 Bits M8 1pc.	R50350 T track nut 40pc.	
R50601 Safety screw M6x16 42pc.	R5022 Plastic nut 8pc.	R1127 Washer 9x28 12pc.	R5061 Safety screw M8x16 6pc.	R50614 Safety screw M8x45 12pc.
R50604 Safety screw M6x40 20pc.	R5060 Safety screw M6x12 6pc.	R50616 Safety nut M8 12pc		

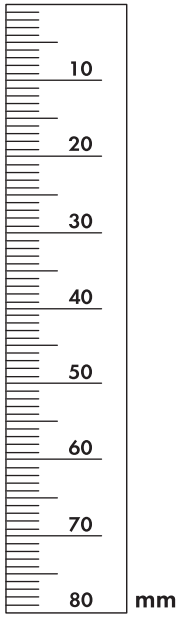

11492-03

Net weight
2.2 kg
Made in EU

MODUL-SYSTEM

11493-03

Skruvsats • Jeu de vis

Set of Nuts and Bolts • Universalmontagesatz

R50603 Safety screw M6x35 30pc.	R50604 Safety screw M6x40 30pc.	R50605 Safety screw M6x45 12pc.	R50609 Safety screw M6x57 4pc.
R11893 Rivet 4,8x14 50pc.	R50614 Safety screw M8x45 8pc.	R11895 Rivet 4,8x30 50pc.	R50614 Safety screw M8x45 8pc.
R50350 T-track nut 70pc.	R1073-01 Bits M6 1pc. R1074-01 Bits M8 1pc.		R50601 Safety screw M6x16 60pc.
			R5022 Plastic nut 8pc.
			R50616 Safety nut M8 20pc
R5060 Safety screw M6x12 10pc.	R50602 Safety screw M6x25 6pc.	R50607 Safety nut M6 50pc.	R5061 Safety screw M8x16 10pc.
R50610 Safety screw M8x25 6pc.	R50611 Safety screw M8x30 6pc.	R50612 Safety screw M8x35 6pc.	R1127 Washer 9x28 12pc.

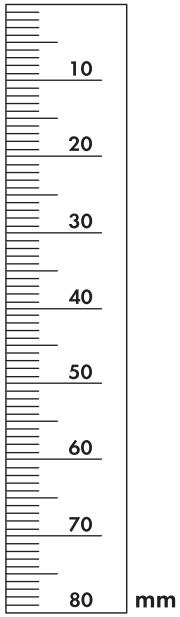

11493-03

Net weight
2.2 kg
Made in EU